DESIGNS AND ESTIMATES APPENDIX
Volume 2 - ULS System Final Feasibility Level Cost Estimate

Central Utah Project Completion Program

Supplement to the 1988 Definite Plan
Report for the Bonneville Unit

October 2004

UTAH RECLAMATION
MITIGATION
AND CONSERVATION
COMMISSION

SUPPLEMENT TO THE BONNEVILLE UNIT DEFINITE PLAN REPORT

DESIGNS AND ESTIMATES APPENDIX
Volume 2

CUP
CENTRAL UTAH WATER CONSERVANCY DISTRICT
COMPLETION ACT

PREPARED BY:

Central Utah Water Conservancy District
355 West University Parkway
Orem, UT 84058

UNDER THE DIRECTION OF:

Mark Breitenbach, Project Manager
Central Utah Water Conservancy District
Telephone: (801) 226-7105
Facsimile: (801) 226-7150

WITH THE ASSISTANCE OF:

Montgomery Watson Harza
Mayya Group International, LLC

October 2004

Central Utah Project Completion Program

Summary

October 2004

UTAH RECLAMATION
MITIGATION
AND CONSERVATION
COMMISSION

TABLE OF CONTENTS

Page No.

SUMMARY – ULS SYSTEM FINAL FEASIBILITY LEVEL COST ESTIMATE..... 1-1
- Feasibility Design Cost Estimate and Schedule 1-1
- Summary..... 1-1
- Source of Cost Data..... 1-2
- Contingencies 1-2
- Miscellaneous Costs 1-2

List of Other Sections

PROVO RESERVOIR CANAL PIPELINE
SPANISH FORK CANYON PIPELINE
SPANISH FORK – SANTAQUIN PIPELINE
SANTAQUIN – MONA RESERVOIR PIPELINE
MAPLETON – SPINGVILLE LATERAL PIPELINE
SIXTH WATER POWER FACILITY
UPPER DIAMOND POWER FACILITY
QUOTES

PRELIMINARY DESIGN COST ESTIMATE AND SCHEDULE

Summary

This section presents the October 2004 preliminary cost estimate for the Utah Lake System (ULS) Proposed Action consisting of pipelines and power generation/transmission facilities as represented by Map 1-3 attached. The purpose of the ULS is to distribute a portion of the water developed by other parts of the Bonneville Unit to areas along the Wasatch Front. The facilities include:

- Spanish Fork Canyon Pipeline
- Spanish Fork-Santaquin Pipeline
- Santaquin-Mona Reservoir Pipeline
- Spanish Fork-Provo Reservoir Canal Pipeline
- Mapleton-Springville Lateral Pipeline
- Sixth Water Power Facility and Distribution Lines
- Upper Diamond Fork Power Facility and Underground Transmission Cable

More detailed descriptions of the appurtenant features for each facility are listed in the following tables.

The following estimated costs for the ULS System were added to the total construction cost to obtain a total for each facility:

• Gen. Cond. Labor burden:	32% of General Conditions Labor Cost
• Construction labor burden:	28% of Construction Labor Cost
• Sales Tax:	7.5% of Material Cost
• Sub-Contractor bond:	2% of Sub-Contract Cost
• Rental Equip. Markup:	10% of Rental Equip. Cost for Operation, Maint., Markup
• Profit:	8% of Total Project Cost
• Builder's Risk Insurance:	0.311% of Total Project Cost
• General Liability Ins:	0.5% of the Total Project Cost
• Bonds:	Per most current Lockton Bond Rate Schedule

The attached spreadsheets showing the detailed cost estimate have a letter designator such as "c" or "t" located to the right of the partial totals at the end of estimate. The letter "c" indicates that the cost percentage for the item identified was calculated from the construction costs prior to mark-ups, while the letter "t" indicates that the cost percentage was calculated from the project total cost including overhead, bonds, insurance, profit, and contingencies. The letter "b" indicated that the cost for performance/payment bonds is a base number as determined by the Lockton Bond Rate Schedule.

Source of Cost Data and Level of Detail

The October 2004 cost estimate is based on the following:

1. Pipelines
   - Preliminary plan and profile drawings placed on topographical maps
   - Spreadsheets and preliminary hydraulic analysis identifying pipe sizes and length
   - Budget quotes from pipe manufacturers
   - Budget valve quotes
   - Budget Bore and Jack quotes
2. Power Generation Facilities
   - Based on parametric cost analysis and compared to MWH's cost database for similar size hydroelectric projects

Takeoffs and pricing were developed for the alternative using the available data. Wage rates for estimating construction labor costs are based on Utah Occupational Wages. Assumptions forming the cost basis for the alternative is included in Table as follows.

The estimating effort completed for the alternative is classified as a concept screening level estimate, or Class 5 estimate as defined by the Association for the Advancement of Cost Engineering International (AACEI). This class of estimate is typically prepared based on engineering from 0% to 10% complete, and often with only the proposed type of system, location, and capacity known. The expected accuracy range is +/- 25%.

Contingencies

A contingency of 20% is included in the component estimates for the alternative. The use of the contingencies is normal and is based on uncertainties inherent in the early stages of project development. The contingency represents unknowns and uncertainties in engineering, construction, geotechnical, regulatory, and environmental factors. The contingency was based upon the total project cost.

Miscellaneous Costs

The cost of right-of-way and property acquisition, engineering, legal, and administration included in the estimates as defined in the table below. Right of way costs are located in the "quote" section of the cost estimate. Cost estimate for the right of ways were based on County tax records, realtors, and the "Spanish Fork Canyon-Nephi Irrigation System, Designs and Estimates Appendix, dated March 1998.

General

A. Pipe sizing is per hydraulic analysis completed through January-2004.

B. All Pipelines contain the following items based on a per linear foot of pipe price factor:
- Erosion Control
- Dewatering
- Landscape Restoration
- Cathodic Protection

C. Only the cost to haul and spread excess material from excavations is included. No disposal fees are included.
D. Only minimal valving for each pipeline is included.
E. Wetlands Restoration is based on a per acre price for an estimated acreage.
F. Roadway and Asphalt repair is based on estimated square yards impacted.
G. Utility conflicts are estimated for each pipeline segment.
H. Air release and blow-off stations are estimated for each pipeline segment.
I. Cost of right-of-way and property acquisition was gathered from three sources – County Tax Records, realtors, and the "Spanish Fork Canyon-Nephi Irrigation System, Designs and Estimates Appendix, dated March 1998". Twenty five percent of the permanent easement value was used for the temporary easement cost.
J. Engineering, legal, and administration costs were assumed to be 7.5% of the cost of construction. Construction cost management services were also assumed to 7.5% of the cost of construction.

➢ **Spanish Fork-Provo Reservoir Pipeline** - This pipeline would be constructed from the Spanish Fork Canyon Pipeline along U.S. Highway 89 through Mapleton City, Springville, Provo and Orem. Discharge locations would be at the Provo River, the Provo Reservoir Canal, and the Jordan Aqueduct. The Provo Reservoir Canal would convey water to Salt Lake County Water Treatment Plants during the summer months. The pipeline would be extended another 1.5 miles to connect to the Jordan Aqueduct near the Utah Valley Water Treatment Plant to convey water during the winter months when the Provo Reservoir Canal is non-operational. The cost estimate for this pipeline segment includes the following features:

- 60" pipe from Spanish Fork to Provo, 26,662' (4' cover)
- 54" pipe through Provo, 53,200' (10' & 4' cover)
- 48" pipeline from Provo Canal to Jordan Aqueduct 24,566 (4' cover)
- Video inspection of properties in Provo and public relations costs to deal residental and commercial businesses.
- Utility conflicts (relocation and utility reconnections)
- 6 each jack & bore crossings (Stream or canal crossings)
- 2 each jack & bore crossings (State Roads)
- 1 each microtunnel crossings (Provo River)
- Ground freezing (approx. 2miles through the Provo Bay area)
- Sections of Highway 89 between Springville and Provo consist of asphalt over 6-inches of concrete. The additional cost of saw cutting and removing the concrete is not included.
- Replace road base course and asphalt
- Replace driveways, sidewalks, curbs and gutters through Provo and Springville
- 19 air vacuum/air release valve vaults

- 50 air release valve vaults
- 19 drain valve vaults w/ associated piping and discharge structures
- 1- 60-inch isolation valve vault with 12-inch pass piping and valve
- 1-isolation valve vault with 2- 48-inch valves with discharge weir to the Provo Reservoir Canal
- Pressure reducing station at the Provo River with discharge weir to the Provo River
- Aqueduct Connection Structure at station 1092+41

➢ **Spanish Fork Canyon Pipeline** – This pipeline would connect to the existing 96-inch welded steel pipe bypass near the Spanish Fork Flow Control Structure at the mouth of Diamond Fork Canyon at Highway 6 and continue to the mouth of Spanish Fork Canyon. The cost estimate as prepared is based upon constructing the pipeline separate from the UDOT Highway 6 reconstruction project. This construction cost estimate presents a conservative approach. Traffic control and road restoration costs must be applied to this cost estimate whereas such costs would not be applicable should the pipeline construction occur concurrently with the UDOT Highway project.

- 84" diameter pipe, 36,808' (4' cover)
- traffic control
- road restoration and temporary retaining structures for shoulder extensions
- 12 each jack & bore crossings (Stream crossings)
- 1 each jack & bore crossings (Railroad Spur)
- 5 air vacuum/air release valve vaults
- 7 air release valve vaults
- 5 drain valve vaults w/ associated piping and discharge structures

➢ **Spanish Fork-Santaquin Pipeline** – This pipeline segment would connect to the Spanish Fork Canyon pipeline about 0.8 miles north west of the Highway 6 and Highway 89 junction and routed through Spanish Fork City, Salem City, Payson City and Santaquin City terminating near the Summit Creek Reservoir. Turnout will be provided so that each entity will be able to utilize the full system pressure head.

- 60, 54, 48, and 36" pipe 92,506 (4' cover)
- 5 each jack-and-bore crossings (State road and interstate)
- 7 each jack-and-bore crossings (Stream or canal crossings)
- 3 each jack-and-bore crossings (railroad crossings)
- 2 each Microtunnel crossings
- 1- 60-inch isolation valve vault with 12-inch pass piping and valve
- 9 turnouts
- 20 air vacuum/air release valve vaults
- 41 air release valve vaults
- 20 drain valve vaults w/ associated piping and discharge structures
- Replace road base course and asphalt
- Traffic control

➢ **Mapleton-Springville Lateral** – Approximately 4.5 miles of this pipeline segment would be placed within the existing Mapleton Lateral Canal and the last mile of canal would be maintained to convey Maple Creek and June sucker flows to Hobble Creek. A pipe would be installed parallel to the last mile of the canal and terminated at the end of the canal (approx. station 305+20) with a stub for a future connection to the Springville Irrigation District. It was assumed that the turnout to the Fingerhut property would be eliminated through an exchange with Spanish Fork City. This cost estimate does not include river diversions for Hobble Creek because the final status of these diversions have not been resolved at the time of this estimate.

- 48, 36, and 30" pipe, 30,040' (4' cover)
- 9 turnouts
- 4 air vacuum/air release valve vaults

- 16 air release valve vaults
- 3 drain valve vaults w/ associated piping and discharge structures
- 2 Pressure reducing stations (Station 10+07 and 260+00)
- Modify existing discharge structure at Hobble Creek (Station 310+41)
- Road and utility restorations at all road crossings.

➢ **Santaquin-Mona Pipeline** – This pipeline segment parallels the union pacific railroad from the Summit Creek Irrigation pond to Mona Reservoir for approximately 5.9 miles and then along the northwest portion of the Mona Reservoir.

- 24" pipe, 40,682' (4' cover)
- 5 air vacuum/air release valve vaults
- 17 air release valve vaults
- 4 drain valve vaults w/ associated piping and discharge structures
- 1 Pressure reducing stations (Station 378+00)
- Weir discharge structure (Station 419+10)
- 1 each jack-and-bore crossing (stream)

➢ **Power Generation -**

- 6th Water Power Plant – Is located near the 6th Water flow control structure and rated for 45 MW.
- Upper Diamond Fork Power Plant – Is located in the upper reach of Diamond Fork Aqueduct and rated for 5 MW.

➢ **Power Transmission Facilities**

- 6th Water Power Plant
  - New transformer at Power Plant
  - Upgrade 15.5 miles of above ground 46 KV transmission line near Sheeps Creek Road to 138 KV capacity
  - Upgrade existing substation near mouth of Syar Tunnel
- Upper Diamond Fork Power Plant
  New transformer at Power Plant

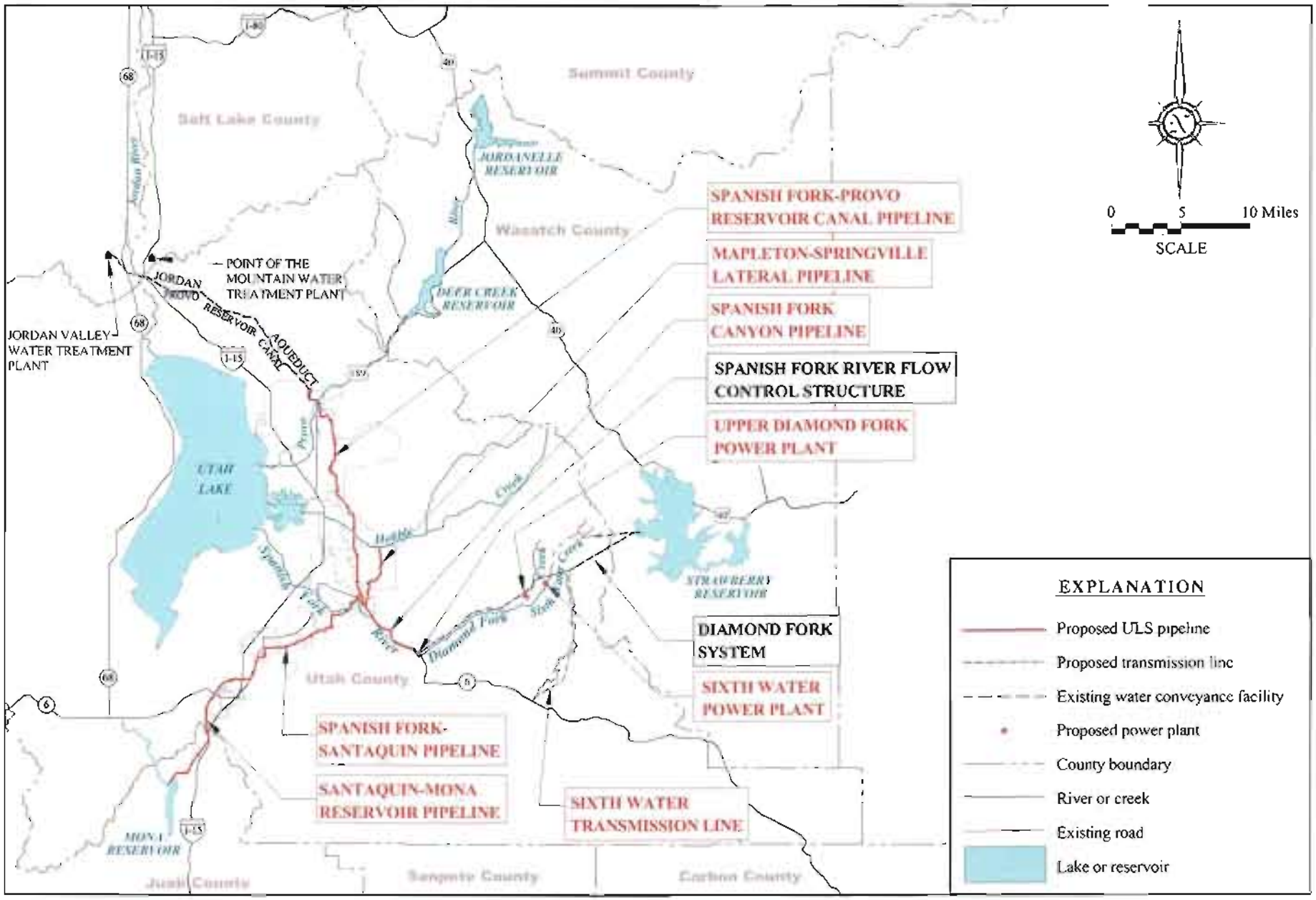

Map 1-3
Features of the Utah Lake System Proposed Action

TABLE VIII-1
SUMMARY TOTAL OF ALL ULS FACILITIES

Cost Items	Spanish Fork Canyon	Provo Reservoir	Santaquin	Mona	Mapleton	6th Water	Upper Diamond Fork	Total/Line Item
General Conditions	$2,112,214	$5,459,971	$4,819,540	$2,045,469	$1,796,186	$1,718,100	$663,166	$18,614,646
Easement Costs	$462,300	$575,064	$1,743,968	$562,516	$315,864			$3,659,712
Public Relations		$6,278,320						$6,278,320
Traffic Control	$474,821	$912,150	$796,820		$92,708			$2,276,499
Pipeline Costs	$51,102,708	$70,899,256	$57,010,642	$9,188,825	$16,048,370			$204,249,801
Dewatering	$361,987	$1,103,602	$1,293,590	$448,361	$164,374			$3,371,914
Erosion Control	$1,518,884	$1,474,366	$885,092	$864,214	$509,156			$5,251,712
Utility work	$299,976	$7,928,246	$3,041,653	$70,659	$1,124,652			$12,465,186
Road Restoration & Street Improvements	$2,966,117	$18,401,693	$7,668,616	$883,971	$59,337			$29,979,733
Landscaping	$130,985	$138,422	$154,591	$126,329	$106,959			$657,286
60-inch Iso. Valve		$169,216	$170,562					$339,778
Misc. Valves	$1,060,116	$2,767,703	$4,863,540	$746,408	$2,689,288			$12,127,054
Turnouts			$0		$0			$0
Cathodic Protection	$299,366	$851,455	$789,181	$301,763	$298,232			$2,539,998
Jack & Bore	$2,358,648	$1,777,123	$3,180,049	$163,861				$7,479,682
Provo River PRV		$910,939						$910,939
PRC discharge Weir		$137,183						$137,183
Alpine Aqueduct Connection		$1,637,490						$1,637,490
48" Valve Vault		$234,474						$234,474
Station 10+07 PRV					$472,716			$472,716
Station 260+00 PRV					$520,694			$520,694
Canal Discharge Mod.					$171,082			$171,082
Valve Vault					$134,562			$134,562
Mona PRV				$280,477				$280,477
Mona discharge Weir				$36,831				$36,831
Building Costs						$0	$0	$0
Site Work						$1,202,578	$459,407	$1,661,985
Yard Piping						$333,477	$250,701	$584,178
Transmission (138KV)						$26,163,631		$26,163,631
Substation						$0		$0
Generator (mechanical)						$0	$4,533,747	$4,533,747
Sub Totals	**$63,148,120**	**$121,656,677**	**$86,417,833**	**$15,719,680**	**$24,504,178**	**$29,417,786**	**$5,907,020**	**$346,771,294**
Design Engineering Costs (7.5%)	**4,736,109**	**9,124,251**	**6,481,337**	**1,178,976**	**1,837,813**	**2,206,334**	**443,027**	**$26,007,847**
Construction Management Costs (7.5%)	**4,736,109**	**9,124,251**	**6,481,337**	**1,178,976**	**1,837,813**	**2,206,334**	**443,027**	**$26,007,847**
Totals	**$72,620,339**	**$139,905,178**	**$99,380,508**	**$18,077,632**	**$28,179,804**	**$33,830,454**	**$6,793,073**	**$398,786,988** ⇦ **TOTAL**
						Total Rounded To:		**$398,800,000**

Central Utah Project Completion Program

Provo Reservoir Canal Pipeline

October 2004

UTAH RECLAMATION
MITIGATION
AND CONSERVATION
COMMISSION

TABLE III-2
SUMMARY SHEET
FOR
PROVO RESERVOIR CANAL PIPELINE

	LABOR	MATERIAL	SUB AMOUNT	EQUIPMENT	OTHER	TOTAL	TOTAL w/Markups*
General Conditions	$2,966,700	$320,340	$10,860	$199,650	$155,000	$3,652,550	$5,459,971
Easement Costs	$0	$0	$0	$0	$384,700	$384,700	$575,064
Public Relations	$0	$0	$4,200,000	$0	$0	$4,200,000	$6,278,320
Traffic Control	$583,200	$0	$0	$27,000	$0	$610,200	$912,150
Pipeline Costs	$14,025,667	$29,023,842	$0	$4,379,882	$0	$47,429,391	$70,899,256
Dewatering	$515,675	$222,600	$0	$0	$0	$738,275	$1,103,602
Erosion Control	$51,338	$934,967	$0	$0	$0	$986,305	$1,474,366
Utility work	$2,632,209	$1,964,465	$0	$707,075	$0	$5,303,749	$7,928,246
Road Restoration & Street Improvements	$894,419	$2,186,097	$9,112,847	$116,796	$0	$12,310,159	$18,401,693
Landscaping	$27,780	$46,300	$0	$18,520	$0	$92,600	$138,422
60-inch Iso. Valve	$0	$0	$113,200	$0	$0	$113,200	$169,216
Misc. Valves	$416,554	$1,046,192	$310,630	$78,131	$0	$1,851,507	$2,767,703
Cathodic Protection	$0	$0	$569,597	$0	$0	$569,597	$851,455
Jack & Bore	$293,480	$434,500	$143,000	$317,860	$0	$1,188,840	$1,777,123
Provo River PRV	$29,263	$541,663	$35,000	$3,464	$0	$609,390	$910,939
PRC discharge Weir	$17,887	$70,760	$0	$3,124	$0	$91,771	$137,183
Alpine Aqueduct Connection	$401,720	$580,264	$18,950	$94,496	$0	$1,095,430	$1,637,490
48" Valve Vault	$49,480	$81,756	$23,500	$2,120	$0	$156,856	$234,474
Total	**$22,905,370**	**$37,453,746**	**$14,537,585**	**$5,948,122**	**$539,700**	**$81,384,523**	**$121,656,677**

* Mark-ups - see Preliminary Design Cost Estimate and Schedule for list of cost markups

Assumptions:

General Assumption - Assumed that excavations through Provo and Springville Cities would require pipeline to be installed at depth to pass beneath existing utilities (min. 10 feet cover)

General Conditions - Includes permits, testing and inspection, QA/QC plans, field office equipment and personnel, and mobilization/demobilization

Easement Costs - Include property acquisition costs, title search, appraisals, etc.

Public Relations - assumed $2,500 per resident for coordination, notification, public meetings, also $2,200,000 for video & photo documentation

Traffic Control - Includes flaggers, traffic control plan, etc.

Pipeline Costs - Includes excavation, backfill/compaction,60/54/48-inch pipes, welded joints

Utility work - Includes relocation or temporary service for waterlines, gas lines, telephone. Also includes reconnection of water service, gas service, telephone service lines

Road Restoration - includes asphalt restoration (6-inch asphalt, 12-inch base course) for State Roads with plant mix seal coats (4-inch asphalt, 12-inch base course) for City Roads.

Miscellaneous Valves - Air Vacuum/Air Release Valve Structures, Air Release Structures, Drain Valves including drain lines to discharge locations.

Street Improvements - Assumed that only one side of road would require curb & gutter, sidewalk, and driveways would be replaced

Spreadsheet Level	Takeoff Quantity	Labor Cost/Unit	Labor Price	Labor Amount	Material Price	Material Amount	Sub Amount	Sub Name	Equip Price	Equip Amount	Other Price	Other Amount	Total Cost/Unit	Total Amount
8000 Spanish Fork Provo Reservoir Canal Pipeline Alt 2														
01 General Conditions				5,957,425		459,110	5,803,387			362,231		770,797		13,352,950
801 Station 53+38 to 80+00				997,190		1,442,488	380,926			194,091				2,714,695
802 Station 80+00 to 250+00				4,585,263		9,580,821	1,410,458			1,295,105				16,872,447
803 Station 250+00 to 320+00				2,697,067		4,255,581	825,019			900,050				8,677,717
804 Station 320+00 to 550+00				6,581,984		11,330,308	5,739,999			2,029,309				25,781,600
805 Station 550+00 to 596+00				1,288,239		2,210,703	525,597			319,687				4,344,226
806 Station 596+00 to 675+00				2,403,207		4,031,028	684,797			620,918				7,739,952
807 Station 675+00 to 690+10				397,176		676,620	224,676			98,844				1,397,516
808 Station 690+10 to 701+00				314,226		501,554	152,616			78,321				1,046,718
809 Station 701+00 to 720+00				570,804		834,272	217,087			144,114				1,766,276
810 Station 720+00 to 850+00				3,911,249		5,849,597	1,451,344			989,782				12,201,972
811 Station 850+00 to 1012+00				4,895,130		7,167,442	2,031,757			1,540,285				15,634,615
812 Station 1012+00 to 1067+00				1,854,918		2,608,500	457,371			620,193				5,540,982
813 Station 1067+00 to 1091+00				595,191		904,179	23,654			147,388				1,670,411
814 Pressure Reducing Vault Provo River, Station 988+00				47,938		775,309	48,237			5,536				878,020
815 PRC Drainage Structure, Station 1011+00				29,302		101,413				4,993				135,708
816 Alpine Aqueduct Connection, Station 1092+00				858,095		831,632	28,117			151,023				1,868,867
817 48" Valve Vault, Station 1011+00				81,058		117,172	32,388			3,388				234,006
8000 Spanish Fork Provo Reservoir Canal Pipeline Alt 2				*37,665,463*		*53,678,528*	*20,035,629*			*9,506,259*		*770,797*		*121,656,677*

Partial Totals

Labor	37,665,463		514,802.012	hrs
Material	53,678,528			
Subcontract	20,035,629			
Equipment	9,506,259		68,691.588	hrs
Other	770,797			
Project Total	121,656,676	121,656,676		
	Partial Total	***121,656,676***		

Spreadsheet Level	Takeoff Quantity	Labor Cost/Unit	Labor Price	Labor Amount	Material Price	Material Amount	Sub Amount	Sub Name	Equip Price	Equip Amount	Other Price	Other Amount	Total Cost/Unit	Total Amount
8000 Spanish Fork Provo Reservoir Canal Pipeline Alt 2														
01 General Conditions														
0060.000 Land Costs														
Permanent Easement Cost	1.00 ls	-	-	-	-	-	-		-	-	282,150.00 /ls	282,150	282,150.00 /ls	282,150
Temporary Easement Cost	1.00 ls	-	-	-	-	-	-		-	-	27,550.00 /ls	27,550	27,550.00 /ls	27,550
Easements, Appraisal/Negotiation	30.00 ea	-	-	-	-	-	-		-	-	2,500.00 /ea	75,000	2,500.00 /ea	75,000
Land Costs		*/ls*										*384,700*	*/ls*	*384,700*
1050.100 Permits														
Construction Permits	1.00 ls	-	-	-	/ls		-		-	-	50,000.00 /ls	50,000	50,000.00 /ls	50,000
Permits		*/ls*										*50,000*	*/ls*	*50,000*
1060.100 Documents														
QA/QC Plan	1.00 ls	11,250.00 /ls	11,250.00 /ls	11,250	2,500.00 /ls	2,500	-		-	-	-	-	13,750.00 /ls	13,750
Documents		*/ls*		*11,250*		*2,500*							*/ls*	*13,750*
1065.100 Start-Up & Commissioning														
Survey & Layouts	1.00 ls	42,000.00 /ls	42,000.00 /ls	42,000	5,000.00 /ls	5,000	-		12,000.00 /ls	12,000	-	-	59,000.00 /ls	59,000
Start-Up & Commissioning		*/ls*		*42,000*		*5,000*				*12,000*			*/ls*	*59,000*
1070.100 Photos														
Project Photos	42.00 mo	450.00 /mo	450.00 /mo	18,900	150.00 /mo	6,300	-		-	-	-	-	600.00 /mo	25,200
Photos		*/mo*		*18,900*		*6,300*							*/mo*	*25,200*
1075.100 Signs														
Project Signs 4x8	1.00 ea	150.00 /ea	150.00 /mh	150	250.00 /ea	250	-		-	-	-	-	400.00 /ea	400
Signs		*/ea*		*150*		*250*							*/ea*	*400*
1100.100 Project Management														
Construction Manager	51.00 wk	2,400.00 /wk	2,400.00 /wk	122,400	-	-	-		100.00 /wk	5,100	-	-	2,500.00 /wk	127,500
Project Engineer	180.00 wk	1,500.00 /wk	1,500.00 /wk	270,000	-	-	-		100.00 /wk	18,000	-	-	1,600.00 /wk	288,000
Purchasing Agent	21.00 wk	2,100.00 /wk	2,100.00 /wk	44,100	-	-	-		75.00 /wk	1,575	-	-	2,175.00 /wk	45,675
Senior Estimator	21.00 wk	1,500.00 /wk	1,500.00 /wk	31,500	-	-	-		75.00 /wk	1,575	-	-	1,575.00 /wk	33,075
Geotechnical Engineer	180.00 wk	1,600.00 /wk	1,600.00 /wk	288,000	-	-	-		75.00 /wk	13,500	-	-	1,675.00 /wk	301,500
Scheduling Engineer	180.00 wk	1,600.00 /wk	1,600.00 /wk	288,000	-	-	-		75.00 /wk	13,500	-	-	1,675.00 /wk	301,500
Project Management		*/wk*		*1,044,000*						*53,250*			*/wk*	*1,097,250*
1102.100 Site Supervision														
General Superintendent	180.00 wk	2,100.00 /wk	2,100.00 /wk	378,000	-	-	-		/wk		-	-	2,100.00 /wk	378,000
Civil Superintendent	180.00 wk	2,100.00 /wk	2,100.00 /wk	378,000	-	-	-		/wk		-	-	2,100.00 /wk	378,000
Assistant Superintendent	180.00 wk	1,500.00 /wk	1,500.00 /wk	270,000	-	-	-		/wk		-	-	1,500.00 /wk	270,000
Site Supervision		*/wk*		*1,026,000*									*/wk*	*1,026,000*
1105.100 Clerical Staff														
Project Secretary	180.00 wk	1,400.00 /wk	1,400.00 /wk	252,000	-	-	-		-	-	-	-	1,400.00 /wk	252,000
Time Keeper	180.00 wk	480.00 /wk	480.00 /wk	86,400	-	-	-		-	-	-	-	480.00 /wk	86,400
Clerical Staff		*/wk*		*338,400*									*/wk*	*338,400*
1110.100 Travel														
Weekly Auto Allowance	340.00 wk	-	-	-	75.00 /wk	25,500	-		-	-	-	-	75.00 /wk	25,500
Travel		*/wk*				*25,500*							*/wk*	*25,500*
1200.100 Security														
Watchman	180.00 wk	1,200.00 /wk	1,200.00 /wk	216,000	-	-	5,300		-	-	-	-	1,235.00 /wk	222,300
Conc Jersey Barriers	500.00 lf	-	-	-	8.00 /lf	4,000	-		-	-	-	-	8.00 /lf	4,000

Spreadsheet Level	Takeoff Quantity	Labor Cost/Unit	Labor Price	Labor Amount	Material Price	Material Amount	Sub Amount	Sub Notes	Equip Price	Equip Amount	Other Price	Other Amount	Total Cost/Unit	Total Amount
Security		/ls		216,000		4,000	6,300						/ls	226,300
1250.100 Offices														
Office Trailer	42.00 mo	-	-	-	-	-	-		1,150.00 /mo	48,300	-	-	1,150.00 /mo	48,300
Offices		/ls								48,300			/ls	48,300
1255.100 Supplies & Equip														
Copy Machine	42.00 mo	-	-	-	550.00 /mo	23,100	-		-	-	-	-	550.00 /mo	23,100
Personal Computer	126.00 mo	-	-	-	200.00 /mo	25,200	-		-	-	-	-	200.00 /mo	25,200
Software Licenses	126.00 mo	-	-	-	75.00 /mo	9,450	-		-	-	-	-	75.00 /mo	9,450
Desks & Chairs	126.00 mo	-	-	-	5.00 /mo	630	-		-	-	-	-	5.00 /mo	630
File Cabinets	42.00 mo	-	-	-	5.00 /mo	210	-		-	-	-	-	5.00 /mo	210
Postage & Courier Services	42.00 mo	-	-	-	200.00 /mo	8,400	-		-	-	-	-	200.00 /mo	8,400
Fax Machine & Line	42.00 mo	-	-	-	150.00 /mo	6,300	-		-	-	-	-	150.00 /mo	6,300
Office Supplies & Equipment	42.00 mo	-	-	-	150.00 /mo	6,300	-		-	-	-	-	150.00 /mo	6,300
Supplies & Equip		/ls				79,590							/ls	79,590
1260.100 Utilities														
Electric Power	42.00 mo	-	-	-	700.00 /mo	29,400	-		-	-	-	-	700.00 /mo	29,400
Telephone Charges	42.00 mo	-	-	-	750.00 /mo	31,500	-		-	-	-	-	750.00 /mo	31,500
Temporary Toilets	42.00 mo	-	-	-	150.00 /mo	6,300	-		-	-	-	-	150.00 /mo	6,300
Utilities		/ls				67,200							/ls	67,200
1270.100 OSHA & Safety														
Safety Officer	180.00 wk	1,500.00 /wk	20.00 /mh	270,000	-	-	-		-	-	-	-	1,500.00 /wk	270,000
First Aid	1.00 ls		/ls		120,000.00 /ls	120,000	-		/ls		-	-	120,000.00 /ls	120,000
OSHA & Safety		/ls		270,000		120,000							/ls	390,000
1300.100 Allowances														
Office Furniture - Allowance	1.00 ls		/ls		10,000.00 /ls	10,000			-	-	-	-	10,000.00 /ls	10,000
Traffic Control, 3 each Flaggers	540.00 wk	1,080.00 /wk	1,080.00 /wk	583,200	/wk		-		50.00 /wk	27,000	-	-	1,130.00 /wk	610,200
Allowances		/ls		583,200		10,000				27,000			/ls	620,200
1460.100 Testing														
Misc Test & Inspection	42.00 mo	-	-	-	-	-			-	-	2,500.00 /mo	105,000	2,500.00 /mo	105,000
Video Inspection in Provo & Springville	1.00 ls	-	-	-	-	-	**2,200,000**		-	-	-	-	2,200,000.00 /ls	2,200,000
Public Relations/Negotiations w/Property Owners	2,000.00 ea	-	-	-	-	-	**2,000,000**		-	-	-	-	1,000.00 /ea	2,000,000
Testing		/ls					4,200,000					105,000	/ls	4,305,000
1630.100 Mobilization / Demobiliza														
Mobilization / Demobilization	24.00 ea		/ea		-	-	4,560		/ea		-	-	190.00 /ea	4,560
Mobilization / Demobiliza		/ls					4,560						/ls	4,560
2502.012 Trench Shoring														
Trench Box, 16' Deep, 2 each	84.00 mo	-	-	-	-	-	-		1,025.00 /mo	86,100	-	-	1,025.00 /mo	86,100
Trench Shoring		/mo								86,100			/mo	86,100
01 General Conditions				**3,549,900**		**320,340**	**4,210,860**			**226,650**		**539,700**		**8,847,450**

601 Station 53+38 to 60+00

2240.120 Dewatering

Spreadsheet Level	Takeoff Quantity	Labor Cost/Unit	Labor Price	Labor Amount	Material Price	Material Amount	Sub Amount	Sub Name	Equip Price	Equip Amount	Other Price	Other Amount	Total Cost/Unit	Total Amount
2240.120 Dewatering														
Wellpoint Dewatering	0.60 mo	24,400.00 /mo	18.00 /mh	14,640	10,500.00 /mo	6,300	-		/mo		-	-	34,900.00 /mo	20,940
Dewatering		*/mo*		*14,640*		*6,300*							*/mo*	*20,940*
2316.202 Pipe Excavation														
Excavate Silt-Clay, Loam, Hydraulic Hoe	10,750.00 cy	0.94 /cy	140.08 /cd	10,105	-	-	-		1.60 /cy	17,200	-	-	2.54 /cy	27,305
Backfill and Compact, Machine	8,812.00 cy	1.53 /cy	140.08 /cd	13,482	-	-	-		0.89 /cy	7,843	-	-	2.42 /cy	21,325
Excess Material Offsite	4,580.00 cy	3.30 /cy	140.08 /cd	15,114	-	-	-		2.93 /cy	13,419	-	-	6.23 /cy	28,533
Pipe Excavation		*/cy*		*38,701*						*38,462*			*/cy*	*77,163*
2370.150 Temp Erosion Control														
Erosion Control Mats-Slopes	7,985.00 sf	0.12 /sf	12.08 /ch	965	2.00 /sf	17,567	-		-	-	-	-	2.32 /sf	18,532
Temp Erosion Control		*/sf*		*965*		*17,567*							*/sf*	*18,532*
2502.014 Pipe Bedding														
Utility Bed Gravel-Crushed	2,745.00 cy	3.30 /cy	96.64 /cd	9,059	12.00 /cy	36,234	-		11.70 /cy	32,117	-	-	28.20 /cy	77,409
Pipe Bedding		*/cy*		*9,059*		*36,234*				*32,117*			*/cy*	*77,409*
2580.500 Utility Conflicts														
Utility Conflicts	1.00 ea	16,257.80 /ea	19.24 /mh	16,258	13,685.00 /ea	13,685	-		5,680.00 /ea	5,680	-	-	35,622.80 /ea	35,623
Replace Utility Connection, Water, Sewer, Telephone, Gas, Electric	3.00 ea	507.00 /ea	507.00 /ea	1,521	500.00 /ea	1,500	-		135.00 /ea	405	-	-	1,142.00 /ea	3,426
Utility Conflicts		*/ea*		*17,779*		*15,185*				*6,085*			*/ea*	*39,049*
2740.120 Asphalt Paving - SY														
Compacted Base 12", 2662 LF by 24'	7,100.00 sy	-	-	-	-	-	148,603		-	-	-	-	20.93 /sy	148,603
Wear Course 1 1/2", 2682 LF by 24'	7,100.00 sy	0.35 /sy	0.35 /sy	2,485	2.41 /sy	17,111			0.25 /sy	1,775	-	-	3.01 /sy	21,371
Bituminous Top Course 6", 2662 LF by 24'	7,100.00 sy	0.76 /sy	0.76 /sy	5,396	8.45 /sy	59,995			0.55 /sy	3,905	-	-	9.76 /sy	69,296
Asphalt Paving - SY		*/sy*		*7,881*		*77,106*	*148,603*			*5,680*			*/sy*	*239,270*
2950.000 SITE RESTORATION														
Restore Landscaping	6.00 msf	30.00 /msf	30.00 /msf	180	50.00 /msf	300	-		20.00 /msf	120	-	-	100.00 /msf	600
SITE RESTORATION		*/msf*		*180*		*300*				*120*			*/msf*	*600*
11295.010 Valves- Butterfly Flange														
60" Isolation Valve Vault System, 12" By Pass	1.00 ea		/mh		/ea		113,200		-	-	-	-	113,200.00 /ea	113,200
Valves- Butterfly Flange		*/ea*					*113,200*						*/ea*	*113,200*
15230.301 XH Pipe PE														
60" Steel Pipe, 350 psi, Mortar Lined & Coated	2,662.00 lf	24.50 /lf	16.78 /mh	65,219	306.00 /lf	814,572	-		12.00 /lf	31,944	-	-	342.50 /lf	911,735
Welding per Joint - 60"	58.00 ea	4,537.00 /ea	4,537.00 /ea	263,146	125.00 /ea	7,250	-		100.00 /ea	5,800	-	-	4,762.00 /ea	276,196
XH Pipe PE		*/lf*		*328,365*		*821,822*				*37,744*			*/lf*	*1,187,931*
15230.340 Turn Outs, Drains, Air Re														
Air Release Vault, 2"	1.00 ea	2,937.00 /ea	2,937.00 /ea	2,937	6,298.00 /ea	6,298	-		479.00 /ea	479	-	-	9,714.00 /ea	9,714
Air Vacuum/Air Release Vault, 10"	1.00 ea	5,078.00 /ea	5,078.00 /ea	5,078	25,672.00 /ea	25,672	-		757.00 /ea	757	-	-	31,507.00 /ea	31,507

Spreadsheet Level	Takeoff Quantity		Labor Cost/Unit		Labor Price	Labor Amount	Material Price		Material Amount	Sub Amount	Sub Name	Equip Price	Equip Amount	Other Price	Other Amount	Total Cost/Unit		Total Amount
Turn Outs, Drains, Air Re			*/ea*			*8,015*			*31,970*				*1,236*				*/ea*	*41,221*
16151.110 Cathodic Protection																		
Cathodic Protection, Impressed Current	2,662.00	lf			/mh			/lf		2,662		-	-	-	-	1.00	/lf	2,662
Joint Seal	58.00	ea			/mh			/ea		7,250		-	-	-	-	125.00	/ea	7,250
Joint Bond	58.00	ea			/mh			/ea		3,480		-	-	-	-	60.00	/ea	3,480
Test Station at 1000 LF	3.00	ea			/mh			/ea		1,200		-	-	-	-	400.00	/ea	1,200
Cathodic Protection			*/lf*							*14,592*							*/lf*	*14,592*
801 Station 53+38 to 80+00						**425,584**			**1,006,484**	**276,395**			**121,444**					**1,829,907**
802 Station 80+00 to 250+00																		
2240.120 Dewatering																		
Wellpoint Dewatering	3.50	mo	24,400.00	/mo	18.00 /mh	85,400	10,500.00	/mo	36,750	-		/mo		-	-	34,900.00	/mo	122,150
Dewatering			*/mo*			*85,400*			*36,750*								*/mo*	*122,150*
2316.202 Pipe Excavation																		
Excavate Silt-Clay, Loam, Hydraulic Hoe	68,660.00	cy	0.94	/cy	140.08 /cd	64,540	-		-	-		1.60 /cy	109,856	-	-	2.54	/cy	174,396
Backfill and Compact, Machine	56,270.00	cy	1.53	/cy	140.08 /cd	86,093	-		-	-		0.89 /cy	50,080	-	-	2.42	/cy	136,173
Excess Material Offsite	30,855.00	cy	3.30	/cy	140.08 /cd	101,822	-		-	-		2.93 /cy	90,405	-	-	6.23	/cy	192,227
Pipe Excavation			*/cy*			*252,455*							*250,341*				*/cy*	*502,797*
2370.150 Temp Erosion Control																		
Erosion Control Mats-Slopes	51,000.00	sf	0.12	/sf	12.08 /ch	6,161	2.00	/sf	112,200	-		-	-	-	-	2.32	/sf	118,361
Temp Erosion Control			*/sf*			*6,161*			*112,200*								*/sf*	*118,361*
2502.014 Pipe Bedding																		
Utility Bed Gravel-Crushed	18,500.00	cy	3.30	/cy	96.64 /cd	61,050	12.00	/cy	244,200	-		11.70 /cy	216,450	-	-	28.20	/cy	521,700
Pipe Bedding			*/cy*			*61,050*			*244,200*				*216,450*				*/cy*	*521,700*
2580.500 Utility Conflicts																		
Utility Conflicts	8.00	ea	21,125.00	/ea	25.00 /mh	169,000	13,685.00	/ea	109,480	-		5,680.00 /ea	45,440	-	-	40,490.00	/ea	323,920
Replace Utility Connection, Water, Sewer, Telephone, Gas, Electric	120.00	ea	507.00	/ea	507.00 /ea	60,840	500.00	/ea	60,000	-		135.00 /ea	16,200	-	-	1,142.00	/ea	137,040
Utility Conflicts			*/ea*			*229,840*			*169,480*				*61,640*				*/ea*	*460,960*
2630.006 Catch Basin 6'																		
4" Blow-Off Drainage System, 197+89	1.00	ea			/ch			/ea		3,000		/ch		-	-	3,000.00	/ea	3,000
Catch Basin 6'			*/ea*							*3,000*							*/ea*	*3,000*
2740.120 Asphalt Paving - SY																		
Compacted Base 12", 17000 LF by 23'	43,440.00	sy	-		-	-	-		-	909,199		-	-	-	-	20.93	/sy	909,199
Bituminous Top Course 4", 1000 LF by 23'	2,555.00	sy	-		-	-	-		-	20,440		-	-	-	-	8.00	/sy	20,440
Wear Course 1 1/2", 16000 LF by 23'	40,890.00	sy	0.35	/sy	0.35 /sy	14,312	2.41	/sy	98,545			0.25 /sy	10,223	-	-	3.01	/sy	123,079
Bituminous Top Course 6", 16000 LF by 23'	40,890.00	sy	0.76	/sy	0.76 /sy	31,076	8.45	/sy	345,521			0.55 /sy	22,490	-	-	9.76	/sy	399,086
Asphalt Paving - SY			*/sy*			*45,388*			*444,065*	*929,639*			*32,712*				*/sy*	*1,451,805*
2950.000 SITE RESTORATION																		

Spreadsheet Level	Takeoff Quantity	Labor Cost/Unit	Labor Price	Labor Amount	Material Price	Material Amount	Sub Amount	Sub Items	Equip Price	Equip Amount	Other Price	Other Amount	Total Cost/Unit	Total Amount
2950.000 SITE RESTORATION														
Restore Landscaping	40.00 msf	30.00 /msf	30.00 /msf	1,200	50.00 /msf	2,000	-		20.00 /msf	800	-	-	100.00 /msf	4,000
SITE RESTORATION		*/msf*		*1,200*		*2,000*				*800*			*/msf*	*4,000*
3000.150 Concrete Sidewalks and Dr														
20' Wide Driveways	400.00 lf	26.60 /lf	26.60 /lf	10,640	30.40 /lf	12,160			0.40 /lf	160	-	-	57.40 /lf	22,960
Concrete Sidewalks and Dr		*/cy*		*10,640*		*12,160*				*160*			*/cy*	*22,960*
15230.301 XH Pipe PE														
60" Steel Pipe, 400 psi, Mortar Lined & Coated	17,000.00 lf	24.50 /lf	16.78 /mh	416,500	322.00 /lf	5,474,000	-		12.00 /lf	204,000	-	-	358.50 /lf	6,094,500
Welding per Joint - 60"	362.00 ea	4,537.00 /ea	4,537.00 /ea	1,642,394	125.00 /ea	45,250	-		100.00 /ea	36,200	-	-	4,762.00 /ea	1,723,844
XH Pipe PE		*/lf*		*2,058,894*		*5,519,250*				*240,200*			*/lf*	*7,818,344*
15230.314 Pipe Fittings														
60" Pipe Fittings	6.00 ea	750.00 /ea	16.78 /mh	4,500	7,500.00 /ea	45,000	-		175.00 /ea	1,050	-	-	8,425.00 /ea	50,550
Pipe Fittings		*/ea*		*4,500*		*45,000*				*1,050*			*/ea*	*50,550*
15230.340 Turn Outs, Drains, Air Re														
Air Release Vault, 2"	10.00 ea	2,937.00 /ea	2,937.00 /ea	29,370	6,298.00 /ea	62,980	-		479.00 /ea	4,790	-	-	9,714.00 /ea	97,140
Air Vacuum/Air Release Vault, 10"	1.00 ea	5,078.00 /ea	5,078.00 /ea	5,078	25,672.00 /ea	25,672	-		757.00 /ea	757	-	-	31,507.00 /ea	31,507
Drain Vault, 4"	1.00 ea	8,997.00 /ea	8,997.00 /ea	8,997	11,041.00 /ea	11,041	-		2,080.00 /ea	2,080	-	-	22,118.00 /ea	22,118
Turn Outs, Drains, Air Re		*/ea*		*43,445*		*99,693*				*7,627*			*/ea*	*150,765*
16151.110 Cathodic Protection														
Cathodic Protection, Impressed Current	17,000.00 lf		/mh		/lf		17,000		-	-	-	-	1.00 /lf	17,000
Joint Seal	362.00 ea		/mh		/ea		45,250		-	-	-	-	125.00 /ea	45,250
Joint Bond	362.00 ea		/mh		/ea		21,720		-	-	-	-	60.00 /ea	21,720
Test Station at 1000 LF	17.00 ea		/mh		/ea		6,800		-	-	-	-	400.00 /ea	6,800
Cathodic Protection		*/lf*					*90,770*						*/lf*	*90,770*
802 Station 80+00 to 250+00				**2,798,972**		**6,584,798**	**1,023,409**			**810,980**				**11,318,151**
803 Station 250+00 to 320+00														
2240.120 Dewatering														
Wellpoint Dewatering	1.40 mo	24,400.00 /mo	18.00 /mh	34,160	10,500.00 /mo	14,700	-		/mo		-	-	34,900.00 /mo	48,860
Dewatering		*/mo*		*34,160*		*14,700*							*/mo*	*48,860*
2316.202 Pipe Excavation														
Excavate Silt-Clay, Loam, Hydraulic Hoe	82,710.00 cy	0.94 /cy	140.08 /cd	77,747	-	-	-		1.60 /cy	132,336	-	-	2.54 /cy	210,083
Backfill and Compact, Machine	78,600.00 cy	1.53 /cy	140.08 /cd	120,258	-	-	-		0.89 /cy	69,954	-	-	2.42 /cy	190,212
Excess Material Offsite	12,710.00 cy	3.30 /cy	140.08 /cd	41,943	-	-	-		2.93 /cy	37,240	-	-	6.23 /cy	79,183
Pipe Excavation		*/cy*		*239,948*						*239,530*			*/cy*	*479,479*
2370.150 Temp Erosion Control														
Erosion Control Mats-Slopes	21,000.00 sf	0.12 /sf	12.08 /ch	2,537	2.00 /sf	46,200	-		-	-	-	-	2.32 /sf	48,737
Temp Erosion Control		*/sf*		*2,537*		*46,200*							*/sf*	*48,737*
2446.100 Pipe Bore and Jack														
Pipe Boring 72" Casing, Hobble Creek Crossing, Station 313+00	60.00 lf	418.00 /lf	418.00 /lf	25,080	507.00 /lf	30,420			315.00 /lf	18,900	-	-	1,240.00 /lf	74,400

Spreadsheet Level	Takeoff Quantity	Labor Cost/Unit	Labor Price	Labor Amount	Material Price	Material Amount	Sub Amount	Sub Name	Equip Price	Equip Amount	Other Price	Other Amount	Total Cost/Unit	Total Amount
2446.100 Pipe Bore and Jack														
Receiving Pits, Creek Crossing, Station 313+00	1.00 ea	450.00 /ea	450.00 /ea	450	1,530.00 /ea	1,530	-		1,580.00 /ea	1,580	-	-	3,560.00 /ea	3,560
Entry Pits, Creek Crossing, Station 313+00	1.00 ea	3,430.00 /ea	3,430.00 /ea	3,430	13,000.00 /ea	13,000	-		13,450.00 /ea	13,450	-	-	29,880.00 /ea	29,880
Pipe Bore and Jack		*/lf*		*28,960*		*44,950*				*33,930*			*/lf*	*107,840*
2502.014 Pipe Bedding														
Utility Bed Gravel-Crushed	7,620.00 cy	3.30 /cy	96.64 /cd	25,146	12.00 /cy	100,584	-		11.70 /cy	89,154	-	-	28.20 /cy	214,884
Pipe Bedding		*/cy*		*25,146*		*100,584*				*89,154*			*/cy*	*214,884*
2580.500 Utility Conflicts														
Utility Conflicts	12.00 ea	21,125.00 /ea	25.00 /mh	253,500	13,685.00 /ea	164,220	-		5,680.00 /ea	68,160	-	-	40,490.00 /ea	485,880
Replace Utility Connection, Water, Sewer, Telephone, Gas, Electric	150.00 ea	507.00 /ea	507.00 /ea	76,050	500.00 /ea	75,000	-		135.00 /ea	20,250	-	-	1,142.00 /ea	171,300
Utility Conflicts		*/ea*		*329,550*		*239,220*				*88,410*			*/ea*	*657,180*
2630.006 Catch Basin 6'														
4" Blow-Off Drainage System, 271+00	1.00 ea		/ch		/ea		17,950		/ch		-	-	17,950.00 /ea	17,950
4" Blow-Off Drainage System, 308+00	1.00 ea		/ch		/ea		3,000		/ch		-	-	3,000.00 /ea	3,000
Catch Basin 6'		*/ea*					*20,950*						*/ea*	*20,950*
2740.120 Asphalt Paving - SY														
Compacted Base 12", 7000 LF by 24'	18,670.00 sy	-	-	-	-	-	390,763		-	-	-	-	20.93 /sy	390,763
Bituminous Top Course 4", 7000 LF by 24'	18,670.00 sy	-	-	-	-	-	149,360		-	-	-	-	8.00 /sy	149,360
Asphalt Paving - SY		*/sy*					*540,123*						*/sy*	*540,123*
2770.110 Concrete Curbs & Gutters														
Curb & Gutter, Concrete, Station 250+00 to 320+00	7,000.00 lf	1.95 /lf	53.75 /ch	13,650	7.48 /lf	52,360	-		0.60 /lf	4,200	-	-	10.03 /lf	70,210
Concrete Curbs & Gutters		*/ls*		*13,650*		*52,360*				*4,200*			*/ls*	*70,210*
2950.000 SITE RESTORATION														
Restore Landscaping	35.00 msf	30.00 /msf	30.00 /msf	1,050	50.00 /msf	1,750	-		20.00 /msf	700	-	-	100.00 /msf	3,500
SITE RESTORATION		*/msf*		*1,050*		*1,750*				*700*			*/msf*	*3,500*
3000.150 Concrete Sidewalks and Dr														
5' Sidewalks 4", Station 250+00 to 320+00	7,000.00 lf	6.65 /lf	6.65 /lf	46,550	7.60 /lf	53,200			0.10 /lf	700	-	-	14.35 /lf	100,450
20' Wide Driveways Station 250+00 to 320+00	1,400.00 lf	26.60 /lf	26.60 /lf	37,240	30.40 /lf	42,560			0.40 /lf	560	-	-	57.40 /lf	80,360
Concrete Sidewalks and Dr		*/cy*		*83,790*		*95,760*				*1,260*			*/cy*	*180,810*
15230.301 XH Pipe PE														
60" Steel Pipe, 400 psi, Mortar Lined & Coated	7,000.00 lf	24.50 /lf	16.78 /mh	171,500	322.00 /lf	2,254,000	-		12.00 /lf	84,000	-	-	358.50 /lf	2,509,500
Welding per Joint - 60"	150.00 ea	4,537.00 /ea	4,537.00 /ea	680,550	125.00 /ea	18,750	-		100.00 /ea	15,000	-	-	4,762.00 /ea	714,300
XH Pipe PE		*/lf*		*852,050*		*2,272,750*				*99,000*			*/lf*	*3,223,800*
15230.314 Pipe Fittings														
60" Pipe Fittings	2.00 ea	750.00 /ea	16.78 /mh	1,500	7,500.00 /ea	15,000	-		175.00 /ea	350	-	-	8,425.00 /ea	16,850
Pipe Fittings		*/ea*		*1,500*		*15,000*				*350*			*/ea*	*16,850*

Spreadsheet Level	Takeoff Quantity	Labor Cost/Unit	Labor Price	Labor Amount	Material Price	Material Amount	Sub Amount	Sub Name	Equip Price	Equip Amount	Other Price	Other Amount	Total Cost/Unit	Total Amount
15230.340 Turn Outs, Drains, Air Re														
Air Release Vault, 2"	2.00 ea	2,937.00 /ea	2,937.00 /ea	5,874	6,298.00 /ea	12,596	-		479.00 /ea	958	-	-	9,714.00 /ea	19,428
Air Vacuum/Air Release Vault, 10"	2.00 ea	5,078.00 /ea	5,078.00 /ea	10,156	25,672.00 /ea	51,344	-		757.00 /ea	1,514	-	-	31,507.00 /ea	63,014
Drain Vault, 4"	2.00 ea	8,997.00 /ea	8,997.00 /ea	17,994	11,041.00 /ea	22,082	-		2,080.00 /ea	4,160	-	-	22,118.00 /ea	44,236
Turn Outs, Drains, Air Re		*/ea*		*34,024*		*86,022*				*6,632*			*/ea*	*126,678*
16151.110 Cathodic Protection														
Cathodic Protection, Impressed Current	7,000.00 lf		/mh		/lf		7,000		-	-	-	-	1.00 /lf	7,000
Joint Seal	150.00 ea		/mh		/ea		18,750		-	-	-	-	125.00 /ea	18,750
Joint Bond	150.00 ea		/mh		/ea		9,000		-	-	-	-	60.00 /ea	9,000
Test Station at 1000 LF	7.00 ea		/mh		/ea		2,800		-	-	-	-	400.00 /ea	2,800
Cathodic Protection		*/lf*					*37,550*						*/lf*	*37,550*
803 Station 250+00 to 320+00				**1,646,368**		**2,989,296**	**598,623**			**563,166**				**5,777,450**
804 Station 320+00 to 550+00														
2240.120 Dewatering														
Wellpoint Dewatering	5.00 mo	24,400.00 /mo	18.00 /mh	122,000	10,500.00 /mo	52,500	-		/mo		-	-	34,900.00 /mo	174,500
Dewatering		*/mo*		*122,000*		*52,500*							*/mo*	*174,500*
2316.202 Pipe Excavation														
Excavate Silt-Clay, Loam, Hydraulic Hoe	146,740.00 cy	0.94 /cy	140.08 /cd	137,935	-	-	-		1.60 /cy	234,784	-	-	2.54 /cy	372,719
Backfill and Compact, Machine	133,180.00 cy	1.53 /cy	140.08 /cd	203,765	-	-	-		0.89 /cy	118,530	-	-	2.42 /cy	322,296
Excess Material Offsite	36,000.00 cy	3.30 /cy	140.08 /cd	118,800	-	-	-		2.93 /cy	105,480	-	-	6.23 /cy	224,280
Pipe Excavation		*/cy*		*460,501*						*458,794*			*/cy*	*919,295*
2370.150 Temp Erosion Control														
Erosion Control Mats-Slopes	69,000.00 sf	0.12 /sf	12.08 /ch	8,335	2.00 /sf	151,800	-		-	-	-	-	2.32 /sf	160,135
Temp Erosion Control		*/sf*		*8,335*		*151,800*							*/sf*	*160,135*
2446.100 Pipe Bore and Jack														
Pipe Boring 72" Casing, Spring Creek Crossing, Station 357+00	60.00 lf	418.00 /lf	418.00 /lf	25,080	507.00 /lf	30,420			315.00 /lf	18,900	-	-	1,240.00 /lf	74,400
Receiving Pits, Creek Crossing, Station 357+00	1.00 ea	450.00 /ea	450.00 /ea	450	1,530.00 /ea	1,530	-		1,580.00 /ea	1,580	-	-	3,560.00 /ea	3,560
Entry Pits, Creek Crossing, Station 357+00	1.00 ea	3,430.00 /ea	3,430.00 /ea	3,430	13,000.00 /ea	13,000	-		13,450.00 /ea	13,450	-	-	29,880.00 /ea	29,880
Pipe Bore and Jack		*/lf*		*26,960*		*44,950*				*33,930*			*/lf*	*107,840*
2502.014 Pipe Bedding														
Utility Bed Gravel-Crushed	22,450.00 cy	3.30 /cy	96.64 /cd	74,085	12.00 /cy	296,340	-		11.70 /cy	262,665	-	-	28.20 /cy	633,090
Pipe Bedding		*/cy*		*74,085*		*296,340*				*262,665*			*/cy*	*633,090*
2580.500 Utility Conflicts														
Utility Conflicts	18.00 ea	21,125.00 /ea	25.00 /mh	380,250	13,685.00 /ea	246,330	-		5,680.00 /ea	102,240	-	-	40,490.00 /ea	728,820
Replace Utility Connection, Water, Sewer, Telephone, Gas, Electric	300.00 ea	507.00 /ea	507.00 /ea	152,100	500.00 /ea	150,000	-		135.00 /ea	40,500	-	-	1,142.00 /ea	342,600
Utility Conflicts		*/ea*		*532,350*		*396,330*				*142,740*			*/ea*	*1,071,420*
2630.006 Catch Basin 6'														

Spreadsheet Level	Takeoff Quantity	Labor Cost/Unit	Labor Price	Labor Amount	Material Price	Material Amount	Sub Amount	Sub Markup	Equip Price	Equip Amount	Other Price	Other Amount	Total Cost/Unit	Total Amount
2630.006 Catch Basin 6'														
4" Blow-Off Drainage System, 360+00	1.00 ea		/ch		/ea	17,950			/ch	-		-	17,950.00 /ea	17,950
4" Blow-Off Drainage System, 411+00	1.00 ea		/ch		/ea	22,270			/ch	-		-	22,270.00 /ea	22,270
4" Blow-Off Drainage System, 510+00	1.00 ea		/ch		/ea	22,270			/ch	-		-	22,270.00 /ea	22,270
4" Blow-Off Drainage System, 545+00	1.00 ea		/ch		/ea	17,950			/ch	-		-	17,950.00 /ea	17,950
Catch Basin 6'		*/ea*				*80,440*							*/ea*	*80,440*
2740.120 Asphalt Paving - SY														
Compacted Base 12", 23000 LF by 24'	61,340.00 sy	-	-	-	-	-	1,283,846		-	-	-	-	20.93 /sy	1,283,846
Bituminous Top Course 4", 13000 LF by 24'	334,670.00 sy	-	-	-	-	-	2,677,360		-	-	-	-	8.00 /sy	2,677,360
Wear Course 1 1/2", 10000 LF by 24'	26,670.00 sy	0.35 /sy	0.35 /sy	9,335	2.41 /sy	64,275			0.25 /sy	6,668	-	-	3.01 /sy	80,277
Bituminous Top Course 6", 10000 LF by 24'	26,670.00 sy	0.76 /sy	0.76 /sy	20,269	8.45 /sy	225,362			0.55 /sy	14,669	-	-	9.76 /sy	260,299
Asphalt Paving - SY		*/sy*		*29,604*		*289,636*	*3,961,206*			*21,336*			*/sy*	*4,301,782*
2770.110 Concrete Curbs & Gutters														
Curb & Gutter, Concrete, Station 320+00 to 410+00	9,000.00 lf	1.95 /lf	53.75 /ch	17,550	7.48 /lf	67,320	-		0.60 /lf	5,400	-	-	10.03 /lf	90,270
Curb & Gutter, Concrete, Station 502+00 to 550+00	4,800.00 lf	1.95 /lf	53.75 /ch	9,360	7.48 /lf	35,904	-		0.80 /lf	2,880	-	-	10.03 /lf	48,144
Concrete Curbs & Gutters		*/ls*		*26,910*		*103,224*				*8,280*			*/ls*	*138,414*
2950.000 SITE RESTORATION														
Restore Landscaping	100.00 msf	30.00 /msf	30.00 /msf	3,000	50.00 /msf	5,000	-		20.00 /msf	2,000	-	-	100.00 /msf	10,000
SITE RESTORATION		*/msf*		*3,000*		*5,000*				*2,000*			*/msf*	*10,000*
3000.150 Concrete Sidewalks and Dr														
5' Sidewalks 4", Station 320+00 to 410+00	9,000.00 lf	6.65 /lf	6.65 /lf	59,850	7.60 /lf	68,400			0.10 /lf	900	-	-	14.35 /lf	129,150
20' Wide Driveways Station 320+00 to 410+00	800.00 lf	26.60 /lf	26.60 /lf	21,280	30.40 /lf	24,320			0.40 /lf	320	-	-	57.40 /lf	45,920
5' Sidewalks 4", Station 510+00 to 550+00	4,000.00 lf	6.65 /lf	6.65 /lf	26,600	7.60 /lf	30,400			0.10 /lf	400	-	-	14.35 /lf	57,400
20' Wide Driveways Station 510+00 to 550+00	800.00 lf	26.60 /lf	26.60 /lf	21,280	30.40 /lf	24,320			0.40 /lf	320	-	-	57.40 /lf	45,920
Concrete Sidewalks and Dr		*/cy*		*129,010*		*147,440*				*1,940*			*/cy*	*278,390*
15230.301 XH Pipe PE														
54" Steel Pipe, 450 psi, Mortar Lined & Coated	23,000.00 lf	24.50 /lf	16.78 /mh	563,499	265.00 /lf	6,095,000	-		12.00 /lf	276,000	-	-	301.50 /lf	6,934,499
Welding per Joint - 54"	492.00 ea	4,083.00 /ea	4,083.00 /ea	2,008,836	112.50 /ea	55,350	-		90.00 /ea	44,280	-	-	4,285.50 /ea	2,108,466
XH Pipe PE		*/lf*		*2,572,335*		*6,150,350*				*320,280*			*/lf*	*9,042,965*
15230.314 Pipe Fittings														
54" Pipe Fittings	11.00 ea	750.00 /ea	16.78 /mh	8,250	7,000.00 /ea	77,000	-		175.00 /ea	1,925	-	-	7,925.00 /ea	87,175
Pipe Fittings		*/ea*		*8,250*		*77,000*				*1,925*			*/ea*	*87,175*
15230.340 Turn Outs, Drains, Air Re														
Air Release Vault, 2"	11.00 ea	2,937.00 /ea	2,937.00 /ea	32,307	6,298.00 /ea	69,278	-		479.00 /ea	5,269	-	-	9,714.00 /ea	106,854

Spreadsheet Level	Takeoff Quantity	Labor Cost/Unit	Labor Price	Labor Amount	Material Price	Material Amount	Sub Amount	Sub Rate	Equip Price	Equip Amount	Other Price	Other Amount	Total Cost/Unit	Total Amount
15230.340 Turn Outs, Drains, Air Re														
Air Vacuum/Air Release Vault, 10"	3.00 ea	5,078.00 /ea	5,078.00 /ea	15,234	25,672.00 /ea	77,016	-		757.00 /ea	2,271	-	-	31,507.00 /ea	94,521
Drain Vault, 4"	2.00 ea	8,997.00 /ea	8,997.00 /ea	17,994	11,041.00 /ea	22,082	-		2,080.00 /ea	4,160	-	-	22,118.00 /ea	44,236
Drain Vault, 4" w/AC	2.00 ea	8,997.00 /ea	8,997.00 /ea	17,994	11,341.00 /ea	22,682	-		2,080.00 /ea	4,160	-	-	22,418.00 /ea	44,836
Turn Outs, Drains, Air Re		*/ea*		*53,529*		*191,058*				*15,860*			*/ea*	*290,447*
15151.110 Cathodic Protection														
Cathodic Protection, Impressed Current	23,000.00 lf		/mh		/lf		23,000		-	-	-	-	1.00 /lf	23,000
Joint Seal	492.00 ea		/mh		/ea		61,500		-	-	-	-	125.00 /ea	61,500
Joint Bond	492.00 ea		/mh		/ea		29,520		-	-	-	-	60.00 /ea	29,520
Test Station at 1000 LF	23.00 ea		/mh		/ea		9,200		-	-	-	-	400.00 /ea	9,200
Cathodic Protection		*/lf*					*123,220*						*/lf*	*123,220*
804 Station 320+00 to 550+00				**4,078,869**		**7,905,628**	**4,164,888**			**1,269,750**				**17,419,114**
805 Station 550+00 to 596+00														
2240.120 Dewatering														
Wellpoint Dewatering	0.90 mo	24,400.00 /mo	18.00 /mh	21,960	10,500.00 /mo	9,450	-		/mo		-	-	34,900.00 /mo	31,410
Dewatering		*/mo*		*21,960*		*9,450*							*/mo*	*31,410*
2315.202 Pipe Excavation														
Excavate Silt-Clay, Loam, Hydraulic Hoe	17,090.00 cy	0.94 /cy	140.08 /cd	16,065	-	-	-		1.60 /cy	27,344	-	-	2.54 /cy	43,409
Backfill and Compact, Machine	14,370.00 cy	1.53 /cy	140.08 /cd	21,986	-	-	-		0.89 /cy	12,789	-	-	2.42 /cy	34,775
Excess Material Offsite	7,200.00 cy	3.30 /cy	140.08 /cd	23,760	-	-	-		2.93 /cy	21,096	-	-	6.23 /cy	44,856
Pipe Excavation		*/cy*		*61,811*			*123,220*			*61,229*			*/cy*	*123,040*
2370.150 Temp Erosion Control														
Erosion Control Mats-Slopes	27,600.00 sf	0.12 /sf	12.08 /ch	3,334	2.00 /sf	60,720	-		-	-	-	-	2.32 /sf	64,054
Temp Erosion Control		*/sf*		*3,334*		*60,720*							*/sf*	*64,054*
2502.014 Pipe Bedding														
Utility Bed Gravel-Crushed	4,490.00 cy	3.30 /cy	96.64 /cd	14,817	12.00 /cy	59,268	-		11.70 /cy	52,533	-	-	28.20 /cy	126,618
Pipe Bedding		*/cy*		*14,817*		*59,268*				*52,533*			*/cy*	*126,618*
2580.500 Utility Conflicts														
Utility Conflicts	2.00 ea	21,125.00 /ea	25.00 /mh	42,250	13,685.00 /ea	27,370	-		5,680.00 /ea	11,360	-	-	40,490.00 /ea	80,980
Replace Utility Connection, Water, Sewer, Telephone, Gas, Electric	20.00 ea	507.00 /ea	507.00 /ea	10,140	500.00 /ea	10,000	-		135.00 /ea	2,700	-	-	1,142.00 /ea	22,840
Utility Conflicts		*/ea*		*52,390*		*37,370*				*14,060*			*/ea*	*103,820*
2740.120 Asphalt Paving - SY														
Compacted Base 12", 4600 LF by 24'	12,270.00 sy	-	-	-	-	-	256,811		-	-	-	-	20.93 /sy	256,811
Bituminous Top Course 4"4600 LF by 24'	12,270.00 sy	-	-	-	-	-	98,160		-	-	-	-	8.00 /sy	98,160
Asphalt Paving - SY		*/sy*					*354,971*						*/sy*	*354,971*
2770.110 Concrete Curbs & Gutters														
Curb & Gutter, Concrete, Station 550+00 to 596+00	4,600.00 lf	1.95 /lf	53.75 /ch	8,970	7.48 /lf	34,408	-		0.60 /lf	2,760	-	-	10.03 /lf	46,138
Concrete Curbs & Gutters		*/ls*		*8,970*		*34,408*				*2,760*			*/ls*	*46,138*

Spreadsheet Level	Takeoff Quantity	Labor Cost/Unit	Labor Price	Labor Amount	Material Price	Material Amount	Sub Amount	Sub Name	Equip Price	Equip Amount	Other Price	Other Amount	Total Cost/Unit	Total Amount
2950.000 SITE RESTORATION														
Restore Landscaping	25.00 msf	30.00 /msf	30.00 /msf	750	50.00 /msf	1,250	-		20.00 /msf	500	-	-	100.00 /msf	2,500
SITE RESTORATION		*/msf*		*750*		*1,250*				*500*			*/msf*	*2,500*
3000.150 Concrete Sidewalks and Dr														
5' Sidewalks 4", Station 550+00 to 596+00	4,600.00 lf	6.65 /lf	6.65 /lf	30,590	7.60 /lf	34,960			0.10 /lf	460	-	-	14.35 /lf	66,010
20' Wide Driveways Station 550+00 to 596+00	920.00 lf	26.60 /lf	26.60 /lf	24,472	30.40 /lf	27,968			0.40 /lf	368	-	-	57.40 /lf	52,808
Concrete Sidewalks and Dr		*/cy*		*55,062*		*62,928*				*828*			*/cy*	*118,818*
15230.301 XH Pipe PE														
54" Steel Pipe, 400 psi, Mortar Lined & Coated	4,600.00 lf	24.50 /lf	16.78 /mh	112,700	253.00 /lf	1,163,800	-		12.00 /lf	55,200	-	-	289.50 /lf	1,331,700
Welding per Joint - 54"	107.00 ea	4,083.00 /ea	4,083.00 /ea	436,881	112.50 /ea	12,038	-		90.00 /ea	9,630	-	-	4,285.50 /ea	458,549
XH Pipe PE		*/lf*		*549,581*		*1,175,838*				*64,830*			*/lf*	*1,790,248*
15230.314 Pipe Fittings														
54" Pipe Fittings	9.00 ea	750.00 /ea	16.78 /mh	6,750	7,000.00 /ea	63,000	-		175.00 /ea	1,575	-	-	7,925.00 /ea	71,325
Pipe Fittings		*/ea*		*6,750*		*63,000*				*1,575*			*/ea*	*71,325*
15230.340 Turn Outs, Drains, Air Re														
Air Release Vault, 2"	2.00 ea	2,937.00 /ea	2,937.00 /ea	5,874	6,298.00 /ea	12,596	-		479.00 /ea	958	-	-	9,714.00 /ea	19,428
Air Vacuum/Air Release Vault, 10"	1.00 ea	5,078.00 /ea	5,078.00 /ea	5,078	25,672.00 /ea	25,672	-		757.00 /ea	757	-	-	31,507.00 /ea	31,507
Turn Outs, Drains, Air Re		*/ea*		*10,952*		*38,268*				*1,715*			*/ea*	*50,935*
16151.110 Cathodic Protection														
Cathodic Protection, Impressed Current	4,600.00 lf		/mh		/lf		4,600		-	-	-	-	1.00 /lf	4,600
Joint Seal	107.00 ea		/mh		/ea		13,375		-	-	-	-	125.00 /ea	13,375
Joint Bond	107.00 ea		/mh		/ea		6,420		-	-	-	-	60.00 /ea	6,420
Test Station at 1000 LF	5.00 ea		/mh		/ea		2,000		-	-	-	-	400.00 /ea	2,000
Cathodic Protection		*/lf*					*26,395*						*/lf*	*26,395*
805 Station 550+00 to 596+00				**785,377**		**1,542,500**	**381,366**			**200,030**				**2,910,273**
806 Station 596+00 to 675+00														
2240.120 Dewatering														
Wallpoint Dewatering	1.00 mo	24,400.00 /mo	18.00 /mh	24,400	10,500.00 /mo	10,500	-		/mo		-	-	34,900.00 /mo	34,900
Dewatering		*/mo*		*24,400*		*10,500*							*/mo*	*34,900*
2316.202 Pipe Excavation														
Excavate Silt-Clay, Loam, Hydraulic Hoe	29,340.00 cy	0.94 /cy	140.08 /cd	27,580	-	-	-		1.60 /cy	46,944	-	-	2.54 /cy	74,524
Backfill and Compact, Machine	24,780.00 cy	1.53 /cy	140.08 /cd	37,913	-	-	-		0.89 /cy	22,054	-	-	2.42 /cy	59,968
Excess Material Offsite	12,370.00 cy	3.30 /cy	140.08 /cd	40,821	-	-	-		2.93 /cy	36,244	-	-	6.23 /cy	77,065
Pipe Excavation		*/cy*		*106,314*						*105,242*			*/cy*	*211,556*
2370.150 Temp Erosion Control														
Erosion Control Mats-Slopes	47,400.00 sf	0.12 /sf	12.08 /ch	5,726	2.00 /sf	104,280	-		-	-	-	-	2.32 /sf	110,006
Temp Erosion Control		*/sf*		*5,726*		*104,280*							*/sf*	*110,006*
2502.014 Pipe Bedding														
Utility Bed Gravel-Crushed	7,710.00 cy	3.30 /cy	96.64 /cd	25,443	12.00 /cy	101,772	-		11.70 /cy	90,207	-	-	28.20 /cy	217,422

Spreadsheet Level	Takeoff Quantity	Labor Cost/Unit	Labor Price	Labor Amount	Material Price	Material Amount	Sub Amount	Sub Name	Equip Price	Equip Amount	Other Price	Other Amount	Total Cost/Unit	Total Amount
Pipe Bedding		*/cy*		*25,443*		*101,772*				*90,207*			*/cy*	*217,422*
2580.500 Utility Conflicts														
Utility Conflicts	5.00 ea	21,125.00 /ea	25.00 /mh	105,625	13,685.00 /ea	68,425	-		5,680.00 /ea	28,400	-	-	40,490.00 /ea	202,450
Replace Utility Connection, Water, Sewer, Telephone, Gas, Electric	300.00 ea	507.00 /ea	507.00 /ea	152,100	500.00 /ea	150,000	-		135.00 /ea	40,500	-	-	1,142.00 /ea	342,600
Utility Conflicts		*/ea*		*257,725*		*218,425*				*68,900*			*/ea*	*545,050*
2630.006 Catch Basin 6'														
4" Blow-Off Drainage System, 641+00	1.00 ea		/ch		/ea		20,370		/ch		-	-	20,370.00 /ea	20,370
Catch Basin 6'		*/ea*					*20,370*						*/ea*	*20,370*
2740.120 Asphalt Paving - SY														
Compacted Base 12", 7900 LF by 24'	14,930.00 sy	-	-	-	-	-	312,485		-	-	-	-	20.93 /sy	312,485
Bituminous Top Course 4", 7900 LF by 24'	14,930.00 sy	-	-	-	-	-	119,440		-	-	-	-	8.00 /sy	119,440
Asphalt Paving - SY		*/sy*					*431,925*						*/sy*	*431,925*
2770.110 Concrete Curbs & Gutters														
Curb & Gutter, Concrete, Station 596+00 to 675+00	5,600.00 lf	1.95 /lf	53.75 /ch	10,920	7.48 /lf	41,888	-		0.60 /lf	3,360	-	-	10.03 /lf	56,168
Concrete Curbs & Gutters		*/ls*		*10,920*		*41,888*				*3,360*			*/ls*	*56,168*
2950.000 SITE RESTORATION														
Restore Landscaping	89.00 msf	30.00 /msf	30.00 /msf	2,670	50.00 /msf	4,450	-		20.00 /msf	1,780	-	-	100.00 /msf	8,900
SITE RESTORATION		*/msf*		*2,670*		*4,450*				*1,780*			*/msf*	*8,900*
3000.150 Concrete Sidewalks and Dr														
5' Sidewalks 4", Station 596+00 to 675+00	5,600.00 lf	6.65 /lf	6.65 /lf	37,240	7.60 /lf	42,560			0.10 /lf	560	-	-	14.35 /lf	80,360
20' Wide Driveways Station 596+00 to 675+00	1,120.00 lf	26.60 /lf	26.60 /lf	29,792	30.40 /lf	34,048			0.40 /lf	448	-	-	57.40 /lf	64,288
Concrete Sidewalks and Dr		*/cy*		*67,032*		*76,608*				*1,008*			*/cy*	*144,648*
15230.301 XH Pipe PE														
54" Steel Pipe, 450 psi, Mortar Lined & Coated	7,900.00 lf	24.50 /lf	16.78 /mh	193,550	265.00 /lf	2,093,500	-		12.00 /lf	94,800	-	-	301.50 /lf	2,381,850
Welding per Joint - 54"	181.00 ea	4,083.00 /ea	4,083.00 /ea	739,023	112.50 /ea	20,363	-		90.00 /ea	16,290	-	-	4,285.50 /ea	775,676
XH Pipe PE		*/lf*		*932,573*		*2,113,863*				*111,090*			*/lf*	*3,157,525*
15230.314 Pipe Fittings														
54" Pipe Fittings	14.00 ea	750.00 /ea	16.78 /mh	10,500	7,000.00 /ea	98,000	-		175.00 /ea	2,450	-	-	7,925.00 /ea	110,950
Pipe Fittings		*/ea*		*10,500*		*98,000*				*2,450*			*/ea*	*110,950*
15230.340 Turn Outs, Drains, Air Re														
Air Release Vault, 2"	5.00 ea	2,937.00 /ea	2,937.00 /ea	14,685	6,298.00 /ea	31,490	-		479.00 /ea	2,395	-	-	9,714.00 /ea	48,570
Drain Vault, 4" w/AC	1.00 ea	8,997.00 /ea	8,997.00 /ea	8,997	11,341.00 /ea	11,341	-		2,080.00 /ea	2,080	-	-	22,418.00 /ea	22,418
Turn Outs, Drains, Air Re		*/ea*		*23,682*		*42,831*				*4,475*			*/ea*	*70,988*
16151.110 Cathodic Protection														
Cathodic Protection, Impressed Current	7,900.00 lf		/mh		/lf		7,900		-	-	-	-	1.00 /lf	7,900
Joint Seal	181.00 ea		/mh		/ea		22,625		-	-	-	-	125.00 /ea	22,625
Joint Bond	181.00 ea		/mh		/ea		10,860		-	-	-	-	60.00 /ea	10,860

Spreadsheet Level	Takeoff Quantity	Labor Cost/Unit	Labor Price	Labor Amount	Material Price	Material Amount	Sub Amount	Sub Name	Equip Price	Equip Amount	Other Price	Other Amount	Total Cost/Unit	Total Amount
16151.110 Cathodic Protection														
Test Station at 1000 LF	8.00 ea		/mh		/ea		3,200		-	-	-	-	400.00 /ea	3,200
Cathodic Protection		*/lf*					*44,585*						*/lf*	*44,585*
806 Station 596+00 to 675+00				**1,455,985**		**2,812,517**	**495,880**			**388,512**				**5,154,993**
807 Station 675+00 to 690+10														
2240.120 Dewatering														
Wellpoint Dewatering	0.20 mo	16,375.10 /mo	12.08 /mh	3,275	10,500.00 /mo	2,100	-		/mo		-	-	26,875.10 /mo	5,375
Dewatering		*/mo*		*3,275*		*2,100*							*/mo*	*5,375*
2316.202 Pipe Excavation														
Excavate Silt-Clay, Loam, Hydraulic Hoe	5,620.00 cy	0.94 /cy	140.08 /cd	5,283	-	-	-		1.60 /cy	8,992	-	-	2.54 /cy	14,275
Backfill and Compact, Machine	4,720.00 cy	1.53 /cy	140.08 /cd	7,222	-	-	-		0.69 /cy	4,201	-	-	2.42 /cy	11,422
Excess Material Offsite	2,365.00 cy	3.30 /cy	140.08 /cd	7,805	-	-	-		2.93 /cy	6,929	-	-	6.23 /cy	14,734
Pipe Excavation		*/cy*		*20,309*						*20,122*			*/cy*	*40,431*
2370.150 Temp Erosion Control														
Erosion Control Mats-Slopes	9,060.00 sf	0.12 /sf	12.08 /ch	1,094	2.00 /sf	19,932	-		-	-	-	-	2.32 /sf	21,026
Temp Erosion Control		*/sf*		*1,094*		*19,932*							*/sf*	*21,026*
2502.014 Pipe Bedding														
Utility Bed Gravel-Crushed	1,480.00 cy	3.30 /cy	96.64 /cd	4,884	12.00 /cy	19,536	-		11.70 /cy	17,316	-	-	28.20 /cy	41,736
Pipe Bedding		*/cy*		*4,884*		*19,536*				*17,316*			*/cy*	*41,736*
2580.500 Utility Conflicts														
Replace Utility Connection, Water, Sewer, Telephone, Gas, Electric	5.00 ea	507.00 /ea	507.00 /ea	2,535	500.00 /ea	2,500	-		135.00 /ea	675	-	-	1,142.00 /ea	5,710
Utility Conflicts		*/ea*		*2,535*		*2,500*				*675*			*/ea*	*5,710*
2740.120 Asphalt Paving - SY														
Compacted Base 12", 2000 LF by 24'	5,330.00 sy	-	-	-	-	-	111,557		-	-	-	-	20.93 /sy	111,557
Bituminous Top Course 4", 2000 LF by 24'	5,330.00 sy	-	-	-	-	-	42,640		-	-	-	-	8.00 /sy	42,640
Asphalt Paving - SY		*/sy*					*154,197*						*/sy*	*154,197*
2770.110 Concrete Curbs & Gutters														
Curb & Gutter, Concrete, Station 675+00 to 680+00	1,500.00 lf	1.95 /lf	53.75 /ch	2,925	7.48 /lf	11,220	-		0.60 /lf	900	-	-	10.03 /lf	15,045
Concrete Curbs & Gutters		*/ls*		*2,925*		*11,220*				*900*			*/ls*	*15,045*
2950.000 SITE RESTORATION														
Restore Landscaping	10.00 msf	30.00 /msf	30.00 /msf	300	50.00 /msf	500	-		20.00 /msf	200	-	-	100.00 /msf	1,000
SITE RESTORATION		*/msf*		*300*		*500*				*200*			*/msf*	*1,000*
3000.150 Concrete Sidewalks and Dr														
5' Sidewalks 4", Station 675+00 to 680+00	1,500.00 lf	6.65 /lf	6.65 /lf	9,975	7.60 /lf	11,400			0.10 /lf	150	-	-	14.35 /lf	21,525
20' Wide Driveways Station 675+00 to 680+00	300.00 lf	26.60 /lf	26.60 /lf	7,980	30.40 /lf	9,120			0.40 /lf	120	-	-	57.40 /lf	17,220
Concrete Sidewalks and Dr		*/cy*		*17,955*		*20,520*				*270*			*/cy*	*38,745*

15230.301 XH Pipe PE

Spreadsheet Level	Takeoff Quantity	Labor Cost/Unit	Labor Price	Labor Amount	Material Price	Material Amount	Sub Amount	Sub Name	Equip Price	Equip Amount	Other Price	Other Amount	Total Cost/Unit	Total Amount
15230.301 XH Pipe PE														
54" Steel Pipe, 400 psi, Mortar Lined & Coated	1,510.00 lf	24.50 /lf	16.78 /mh	36,995	253.00 /lf	382,030	-		12.00 /lf	18,120	-	-	289.50 /lf	437,145
Welding per Joint - 54"	36.00 ea	4,083.00 /ea	4,083.00 /ea	146,988	112.50 /ea	4,050	-		90.00 /ea	3,240	-	-	4,285.50 /ea	154,278
XH Pipe PE		*/lf*		*183,983*		*386,080*				*21,360*			*/lf*	*591,423*
15230.314 Pipe Fittings														
54" Pipe Fittings	3.00 ea	750.00 /ea	16.78 /mh	2,250	1,140.00 /ea	3,420	-		175.00 /ea	525	-	-	2,065.00 /ea	6,195
Pipe Fittings		*/ea*		*2,250*		*3,420*				*525*			*/ea*	*6,195*
15230.340 Turn Outs, Drains, Air Re														
Air Release Vault, 2"	1.00 ea	2,937.00 /ea	2,937.00 /ea	2,937	6,298.00 /ea	6,298	-		479.00 /ea	479	-	-	9,714.00 /ea	9,714
Turn Outs, Drains, Air Re		*/ea*		*2,937*		*6,298*				*479*			*/ea*	*9,714*
16151.110 Cathodic Protection														
Cathodic Protection, Impressed Current	1,510.00 lf		/mh		/lf		1,510		-	-	-	-	1.00 /lf	1,510
Joint Seal	36.00 ea		/mh		/ea		4,500		-	-	-	-	125.00 /ea	4,500
Joint Bond	36.00 ea		/mh		/ea		2,160		-	-	-	-	60.00 /ea	2,160
Test Station at 1000 LF	2.00 ea		/mh		/ea		800		-	-	-	-	400.00 /ea	800
Cathodic Protection		*/lf*					*8,970*						*/lf*	*8,970*
607 Station 675+00 to 690+10				**242,447**		**472,106**	**163,157**			**61,847**				**939,558**
608 Station 690+10 to 701+00														
2240.120 Dewatering														
Wellpoint Dewatering	0.20 mo	24,400.00 /mo	16.00 /mh	4,880	10,500.00 /mo	2,100	-		/mo		-	-	34,900.00 /mo	6,980
Dewatering		*/mo*		*4,880*		*2,100*							*/mo*	*6,980*
2316.202 Pipe Excavation														
Excavate Silt-Clay, Loam, Hydraulic Hoe	4,050.00 cy	0.94 /cy	140.08 /cd	3,807	-	-	-		1.60 /cy	6,480	-	-	2.54 /cy	10,287
Backfill and Compact, Machine	3,410.00 cy	1.53 /cy	140.08 /cd	5,217	-	-	-		0.89 /cy	3,035	-	-	2.42 /cy	8,252
Excess Material Offsite	1,710.00 cy	3.30 /cy	140.08 /cd	5,643	-	-	-		2.93 /cy	5,010	-	-	6.23 /cy	10,653
Pipe Excavation		*/cy*		*14,667*						*14,525*			*/cy*	*29,193*
2370.150 Temp Erosion Control														
Erosion Control Mats-Slopes	6,540.00 sf	0.12 /sf	12.08 /ch	790	2.00 /sf	14,388	-		-	-	-	-	2.32 /sf	15,178
Temp Erosion Control		*/sf*		*790*		*14,388*							*/sf*	*15,178*
2502.014 Pipe Bedding														
Utility Bed Gravel-Crushed	1,070.00 cy	3.30 /cy	96.64 /cd	3,531	12.00 /cy	14,124	-		11.70 /cy	12,519	-	-	28.20 /cy	30,174
Pipe Bedding		*/cy*		*3,531*		*14,124*				*12,519*			*/cy*	*30,174*
2580.500 Utility Conflicts														
Replace Utility Connection, Water, Sewer, Telephone, Gas, Electric	20.00 ea	507.00 /ea	507.00 /ea	10,140	500.00 /ea	10,000	-		135.00 /ea	2,700	-	-	1,142.00 /ea	22,840
Utility Conflicts		*/ea*		*10,140*		*10,000*				*2,700*			*/ea*	*22,840*
2630.006 Catch Basin 6'														
4" Blow-Off Drainage System, 700+00	1.00 ea		/ch		/ea		19,880		/ch		-	-	19,880.00 /ea	19,880
Catch Basin 6'		*/ea*					*19,880*						*/ea*	*19,880*
2740.120 Asphalt Paving - SY														

Spreadsheet Level	Takeoff Quantity	Labor Cost/Unit	Labor Price	Labor Amount	Material Price	Material Amount	Sub Amount	Sub Items	Equip Price	Equip Amount	Other Price	Other Amount	Total Cost/Unit	Total Amount
2740.120 Asphalt Paving - SY														
Compacted Base 12", 1090 LF by 24'	2,910.00 sy	-	-	-	-	-	60,906		-	-	-	-	20.93 /sy	60,906
Bituminous Top Course 4", 1090 LF by 24'	2,910.00 sy	-	-	-	-	-	23,280		-	-	-	-	8.00 /sy	23,280
Asphalt Paving - SY		*/sy*					*84,186*						*/sy*	*84,186*
2950.000 SITE RESTORATION														
Restore Landscaping	15.00 msf	30.00 /msf	30.00 /msf	450	50.00 /msf	750	-		20.00 /msf	300	-	-	100.00 /msf	1,500
SITE RESTORATION		*/msf*		*450*		*750*				*300*			*/msf*	*1,500*
15230.301 XH Pipe PE														
54" Steel Pipe, 300 psi, Mortar Lined & Coated	1,090.00 lf	24.50 /lf	18.78 /mh	26,705	227.00 /lf	247,430	-		12.00 /lf	13,080	-	-	263.50 /lf	287,215
Welding per Joint - 54"	28.00 ea	4,083.00 /ea	4,083.00 /ea	114,324	112.50 /ea	3,150	-		90.00 /ea	2,520	-	-	4,285.50 /ea	119,994
XH Pipe PE		*/lf*		*141,029*		*250,580*				*15,600*			*/lf*	*407,209*
15230.314 Pipe Fittings														
54" Pipe Fittings	3.00 ea	750.00 /ea	16.78 /mh	2,250	7,000.00 /ea	21,000	-		175.00 /ea	525	-	-	7,925.00 /ea	23,775
Pipe Fittings		*/ea*		*2,250*		*21,000*				*525*			*/ea*	*23,775*
15230.340 Turn Outs, Drains, Air Re														
Drain Vault, 4" w/AC	1.00 ea	8,997.00 /ea	8,997.00 /ea	8,997	11,341.00 /ea	11,341	-		2,080.00 /ea	2,080	-	-	22,418.00 /ea	22,418
Air Vacuum/Air Release Vault, 10"	1.00 ea	5,078.00 /ea	5,078.00 /ea	5,078	25,672.00 /ea	25,672	-		757.00 /ea	757	-	-	31,507.00 /ea	31,507
Turn Outs, Drains, Air Re		*/ea*		*14,075*		*37,013*				*2,837*			*/ea*	*53,925*
16151.110 Cathodic Protection														
Cathodic Protection, Impressed Current	1,090.00 lf		/mh		/lf		1,090		-	-	-	-	1.00 /lf	1,090
Joint Seal	28.00 ea		/mh		/ea		3,500		-	-	-	-	125.00 /ea	3,500
Joint Bond	28.00 ea		/mh		/ea		1,680		-	-	-	-	60.00 /ea	1,680
Test Station at 1000 LF	1.00 ea		/mh		/ea		400		-	-	-	-	400.00 /ea	400
Cathodic Protection		*/lf*					*6,670*						*/lf*	*6,670*
808 Station 690+10 to 701+00				**191,812**		**349,955**	**110,736**			**49,006**				**701,510**
809 Station 701+00 to 720+00														
2240.120 Dewatering														
Wellpoint Dewatering	0.40 mo	24,400.00 /mo	18.00 /mh	9,760	10,500.00 /mo	4,200	-		/mo		-	-	34,900.00 /mo	13,960
Dewatering		*/mo*		*9,760*		*4,200*							*/mo*	*13,960*
2316.202 Pipe Excavation														
Excavate Sit-Clay, Loam, Hydraulic Hoe	7,060.00 cy	0.94 /cy	140.08 /cd	6,636	-	-	-		1.60 /cy	11,296	-	-	2.54 /cy	17,932
Backfill and Compact, Machine	5,940.00 cy	1.53 /cy	140.08 /cd	9,088	-	-	-		0.89 /cy	5,287	-	-	2.42 /cy	14,375
Excess Material Offsite	2,980.00 cy	3.30 /cy	140.08 /cd	9,834	-	-	-		2.93 /cy	8,731	-	-	6.23 /cy	18,565
Pipe Excavation		*/cy*		*25,559*						*25,314*			*/cy*	*50,873*
2370.150 Temp Erosion Control														
Erosion Control Mats-Slopes	11,400.00 sf	0.12 /sf	12.08 /ch	1,377	2.00 /sf	25,080	-		-	-	-	-	2.32 /sf	26,457
Temp Erosion Control		*/sf*		*1,377*		*25,080*							*/sf*	*26,457*
2502.014 Pipe Bedding														
Utility Bed Gravel-Crushed	1,860.00 cy	3.30 /cy	96.64 /cd	6,138	12.00 /cy	24,552	-		11.70 /cy	21,762	-	-	28.20 /cy	52,452

Spreadsheet Level	Takeoff Quantity	Labor Crew/Unit	Labor Price	Labor Amount	Material Price	Material Amount	Sub Amount	Sub Name	Equip Price	Equip Amount	Other Price	Other Amount	Total Cost/Unit	Total Amount
Pipe Bedding		*/cy*		*6,138*		*24,552*				*21,762*			*/cy*	*52,452*
2580.500 Utility Conflicts														
Utility Conflicts	2.00 ea	21,125.00 /ea	25.00 /mh	42,250	13,685.00 /ea	27,370	-		5,680.00 /ea	11,360	-	-	40,490.00 /ea	80,980
Replace Utility Connection, Water, Sewer, Telephone, Gas, Electric	20.00 ea	507.00 /ea	507.00 /ea	10,140	500.00 /ea	10,000	-		135.00 /ea	2,700	-	-	1,142.00 /ea	22,840
Utility Conflicts		*/ea*		*52,390*		*37,370*				*14,060*			*/ea*	*103,820*
2740.120 Asphalt Paving - SY														
Compacted Base 12", 1900 LF by 24'	5,070.00 sy	-	-	-	-	-	106,115		-	-	-	-	20.93 /sy	106,115
Bituminous Top Course 4", 1900 LF by 24'	5,070.00 sy	-	-	-	-	-	40,560		-	-	-	-	8.00 /sy	40,560
Asphalt Paving - SY		*/sy*					*146,675*						*/sy*	*146,675*
2770.110 Concrete Curbs & Gutters														
Curb & Gutter, Concrete, Station 704+00 to 720+00	1,600.00 lf	1.95 /lf	53.75 /ch	3,120	7.48 /lf	11,968	-		0.60 /lf	960	-	-	10.03 /lf	16,048
Concrete Curbs & Gutters		*/ls*		*3,120*		*11,968*				*960*			*/ls*	*16,048*
2950.000 SITE RESTORATION														
Restore Landscaping	10.00 msf	30.00 /msf	30.00 /msf	300	50.00 /msf	500	-		20.00 /msf	200	-	-	100.00 /msf	1,000
SITE RESTORATION		*/msf*		*300*		*500*				*200*			*/msf*	*1,000*
3000.150 Concrete Sidewalks and Dr														
5' Sidewalks 4", Station 704+00 to 720+00	1,600.00 lf	6.65 /lf	6.65 /lf	10,640	7.60 /lf	12,160			0.10 /lf	160	-	-	14.35 /lf	22,960
20' Wide Driveways Station 704+00 to 720+00	320.00 lf	26.60 /lf	26.60 /lf	8,512	30.40 /lf	9,728			0.40 /lf	128	-	-	57.40 /lf	18,368
Concrete Sidewalks and Dr		*/cy*		*19,152*		*21,888*				*288*			*/cy*	*41,328*
15230.301 XH Pipe PE														
54" Steel Pipe, 300 psi, Mortar Lined & Coated	1,900.00 lf	24.50 /lf	16.78 /mh	46,550	227.00 /lf	431,300	-		12.00 /lf	22,800	-	-	263.50 /lf	500,650
Welding per Joint - 54"	44.00 ea	4,083.00 /ea	4,083.00 /ea	179,652	112.50 /ea	4,950	-		90.00 /ea	3,960	-	-	4,285.50 /ea	188,562
XH Pipe PE		*/lf*		*226,202*		*436,250*				*26,760*			*/lf*	*689,212*
15230.314 Pipe Fittings														
54" Pipe Fittings	2.00 ea	750.00 /ea	16.78 /mh	1,500	7,000.00 /ea	14,000	-		175.00 /ea	350	-	-	7,925.00 /ea	15,850
Pipe Fittings		*/ea*		*1,500*		*14,000*				*350*			*/ea*	*15,850*
15230.340 Turn Outs, Drains, Air Re														
Air Release Vault, 2"	1.00 ea	2,937.00 /ea	2,937.00 /ea	2,937	6,298.00 /ea	6,298	-		479.00 /ea	479	-	-	9,714.00 /ea	9,714
Turn Outs, Drains, Air Re		*/ea*		*2,937*		*6,298*				*479*			*/ea*	*9,714*
16151.110 Cathodic Protection														
Cathodic Protection, Impressed Current	1,900.00 lf		/mh		/lf		1,900		-	-	-	-	1.00 /lf	1,900
Joint Seal	44.00 ea		/mh		/ea		5,500		-	-	-	-	125.00 /ea	5,500
Joint Bond	44.00 ea		/mh		/ea		2,640		-	-	-	-	60.00 /ea	2,640
Test Station at 1000 LF	2.00 ea		/mh		/ea		800		-	-	-	-	400.00 /ea	800
Cathodic Protection		*/lf*					*10,840*						*/lf*	*10,840*
809 Station 701+00 to 720+00				**348,435**		**582,106**	**157,515**			**90,173**				**1,178,229**

810 Station 720+00 to 850+00

2240.120 Dewatering

Spreadsheet Label	Takeoff Quantity	Labor Cost/Unit	Labor Price	Labor Amount	Material Price	Material Amount	Sub Amount	Sub Name	Equip Price	Equip Amount	Other Price	Other Amount	Total Cost/Unit	Total Amount
2240.120 Dewatering														
Wellpoint Dewatering	2.70 mo	24,400.00 /mo	16.00 /mh	65,880	10,500.00 /mo	28,350	-		/mo		-	-	34,900.00 /mo	94,230
Dewatering		*/mo*		*65,880*		*28,350*							*/mo*	*94,230*
2316.202 Pipe Excavation														
Excavate Silt-Clay, Loam, Hydraulic Hoe	48,270.00 cy	0.94 /cy	140.08 /cd	45,374	-	-	-		1.60 /cy	77,232	-	-	2.54 /cy	122,606
Backfill and Compact, Machine	40,620.00 cy	1.53 /cy	140.08 /cd	62,149	-	-	-		0.89 /cy	36,152	-	-	2.42 /cy	98,300
Excess Material Offsite	20,350.00 cy	3.30 /cy	140.08 /cd	67,155	-	-	-		2.93 /cy	59,626	-	-	6.23 /cy	126,781
Pipe Excavation		*/cy*		*174,677*						*173,009*			*/cy*	*347,687*
2370.150 Temp Erosion Control														
Erosion Control Mats-Slopes	78,000.00 sf	0.12 /sf	12.08 /ch	9,422	2.00 /sf	171,600	-		-	-	-	-	2.32 /sf	181,022
Temp Erosion Control		*/sf*		*9,422*		*171,600*							*/sf*	*181,022*
2502.014 Pipe Bedding														
Utility Bed Gravel-Crushed	12,690.00 cy	3.30 /cy	96.64 /cd	41,877	12.00 /cy	167,508	-		11.70 /cy	148,473	-	-	28.20 /cy	357,858
Pipe Bedding		*/cy*		*41,877*		*167,508*				*148,473*			*/cy*	*357,858*
2580.500 Utility Conflicts														
Utility Conflicts	11.00 ea	21,125.00 /ea	25.00 /mh	232,375	13,685.00 /ea	150,535	-		5,680.00 /ea	62,480	-	-	40,490.00 /ea	445,390
Replace Utility Connection, Water, Sewer, Telephone, Gas, Electric	150.00 ea	507.00 /ea	507.00 /ea	76,050	500.00 /ea	75,000	-		135.00 /ea	20,250	-	-	1,142.00 /ea	171,300
Utility Conflicts		*/ea*		*308,425*		*225,535*				*82,730*			*/ea*	*616,690*
2630.006 Catch Basin 6'														
4" Blow-Off Drainage System, 741+00	1.00 ea		/ch		/ea		20,370		/ch		-	-	20,370.00 /ea	20,370
4" Blow-Off Drainage System, 768+00	1.00 ea		/ch		/ea		9,650		/ch		-	-	9,650.00 /ea	9,650
4" Blow-Off Drainage System, 780+00	1.00 ea		/ch		/ea		20,370		/ch		-	-	20,370.00 /ea	20,370
4" Blow-Off Drainage System, 800+00	1.00 ea		/ch		/ea		19,880		/ch		-	-	19,880.00 /ea	19,880
4" Blow-Off Drainage System, 824+00	1.00 ea		/ch		/ea		19,880		/ch		-	-	19,880.00 /ea	19,880
4" Blow-Off Drainage System, 833+00	1.00 ea		/ch		/ea		18,860		/ch		-	-	18,860.00 /ea	18,860
Catch Basin 6'		*/ea*					*109,010*						*/ea*	*109,010*
2740.120 Asphalt Paving - SY														
Compacted Base 12", 11300 LF by 24'	30,130.00 sy	-	-	-	-	-	630,621		-	-	-	-	20.93 /sy	630,621
Bituminous Top Course 4", 11300 LF by 24'	30,130.00 sy	-	-	-	-	-	241,040		-	-	-	-	8.00 /sy	241,040
Asphalt Paving - SY		*/sy*					*871,661*						*/sy*	*871,661*
2770.110 Concrete Curbs & Gutters														
Curb & Gutter, Concrete, Station 720+00 to 850+00	11,300.00 lf	1.95 /lf	53.75 /ch	22,035	7.48 /lf	84,524	-		0.60 /lf	6,780	-	-	10.03 /lf	113,339
Concrete Curbs & Gutters		*/ls*		*22,035*		*84,524*				*6,780*			*/ls*	*113,339*
2950.000 SITE RESTORATION														
Restore Landscaping	60.00 msf	30.00 /msf	30.00 /msf	1,800	50.00 /msf	3,000	-		20.00 /msf	1,200	-	-	100.00 /msf	6,000

Spreadsheet Level	Takeoff Quantity	Labor Cost/Unit	Labor Price	Labor Amount	Material Price	Material Amount	Sub Amount	Sub Name	Equip Price	Equip Amount	Other Price	Other Amount	Total Cost/Unit	Total Amount
SITE RESTORATION		*/msf*		*1,800*		*3,000*				*1,200*			*/msf*	*6,000*
3000.150 Concrete Sidewalks and Dr														
5' Sidewalks 4", Station 720+00 to 850+00	11,300.00 lf	6.65 /lf	6.65 /lf	75,145	7.60 /lf	85,880			0.10 /lf	1,130	-	-	14.35 /lf	162,155
20' Wide Driveways Station 720+00 to 850+00	2,260.00 lf	26.60 /lf	26.60 /lf	60,116	30.40 /lf	68,704			0.40 /lf	904	-	-	57.40 /lf	129,724
Concrete Sidewalks and Dr		*/cy*		*135,261*		*154,584*				*2,034*			*/cy*	*291,879*
15230.301 XH Pipe PE														
54" Steel Pipe, 250 psi, Mortar Lined & Coated	13,000.00 lf	24.50 /lf	16.78 /mh	318,500	216.00 /lf	2,808,000	-		12.00 /lf	156,000	-	-	252.50 /lf	3,282,500
Welding per Joint - 54"	293.00 ea	4,083.00 /ea	4,083.00 /ea	1,196,319	112.50 /ea	32,963	-		90.00 /ea	26,370	-	-	4,285.50 /ea	1,255,652
XH Pipe PE		*/lf*		*1,514,819*		*2,840,963*				*182,370*			*/lf*	*4,538,151*
15230.314 Pipe Fittings														
54" Pipe Fittings	20.00 ea	750.00 /ea	16.78 /mh	15,000	7,000.00 /ea	140,000	-		175.00 /ea	3,500	-	-	7,925.00 /ea	158,500
Pipe Fittings		*/ea*		*15,000*		*140,000*				*3,500*			*/ea*	*158,500*
15230.340 Turn Outs, Drains, Air Re														
Air Release Vault, 2"	3.00 ea	2,937.00 /ea	2,937.00 /ea	8,811	6,298.00 /ea	18,894	-		479.00 /ea	1,437	-	-	9,714.00 /ea	29,142
Drain Vault, 4"	4.00 ea	8,997.00 /ea	8,997.00 /ea	35,988	11,041.00 /ea	44,164	-		2,080.00 /ea	8,320	-	-	22,118.00 /ea	88,472
Drain Vault, 4" w/AC	2.00 ea	8,997.00 /ea	8,997.00 /ea	17,994	11,341.00 /ea	22,682	-		2,080.00 /ea	4,160	-	-	22,418.00 /ea	44,836
Air Vacuum/Air Release Vault, 10"	7.00 ea	5,078.00 /ea	5,078.00 /ea	35,546	25,672.00 /ea	179,704	-		757.00 /ea	5,299	-	-	31,507.00 /ea	220,549
Turn Outs, Drains, Air Re		*/ea*		*98,339*		*265,444*				*19,216*			*/ea*	*392,999*
16151.110 Cathodic Protection														
Cathodic Protection, Impressed Current	13,000.00 lf		/mh		/lf		13,000		-	-	-	-	1.00 /lf	13,000
Joint Seal	293.00 ea		/mh		/ea		36,625		-	-	-	-	125.00 /ea	36,625
Joint Bond	293.00 ea		/mh		/ea		17,580		-	-	-	-	60.00 /ea	17,580
Test Station at 1000 LF	13.00 ea		/mh		/ea		5,200		-	-	-	-	400.00 /ea	5,200
Cathodic Protection		*/lf*					*72,405*						*/lf*	*72,405*
810 Station 720+00 to 850+00				**2,387,536**		**4,081,508**	**1,053,075**			**619,312**				**8,141,431**
811 Station 850+00 to 1012+00														
2240.120 Dewatering														
Wellpoint Dewatering	2.30 mo	24,400.00 /mo	18.00 /mh	56,120	10,500.00 /mo	24,150	-		/mo		-	-	34,900.00 /mo	80,270
Dewatering		*/mo*		*56,120*		*24,150*							*/mo*	*80,270*
2316.202 Pipe Excavation														
Excavate Silt-Clay, Loam, Hydraulic Hoe	60,150.00 cy	0.94 /cy	140.08 /cd	56,541	-	-	-		1.60 /cy	96,240	-	-	2.54 /cy	152,781
Backfill and Compact, Machine	50,610.00 cy	1.53 /cy	140.08 /cd	77,433	-	-	-		0.89 /cy	45,043	-	-	2.42 /cy	122,476
Excess Material Offsite	25,350.00 cy	3.30 /cy	140.08 /cd	83,655	-	-	-		2.93 /cy	74,276	-	-	6.23 /cy	157,931
Pipe Excavation		*/cy*		*217,629*						*215,558*			*/cy*	*433,188*
2370.150 Temp Erosion Control														
Erosion Control Mats-Slopes	48,600.00 sf	0.12 /sf	12.08 /ch	5,871	2.00 /sf	106,920	-		-	-	-	-	2.32 /sf	112,791
Temp Erosion Control		*/sf*		*5,871*		*106,920*							*/sf*	*112,791*
2400.980 Tunnels														
Microtunneling 60", Provo River, Station 987+00	100.00 lf	-	-	-	-	-	143,000		-	-	-	-	1,430.00 /lf	143,000

Spreadsheet Level	Takeoff Quantity	Labor Cost/Unit	Labor Price	Labor Amount	Material Price	Material Amount	Sub Amount	Sub Name	Equip Price	Equip Amount	Other Price	Other Amount	Total Cost/Unit	Total Amount
Tunnels		*/lf*					*143,000*						*/lf*	*143,000*
2446.100 Pipe Bore and Jack														
Pipe Boring 60" Casing, Station 941+00	60.00 lf	348.00 /lf	348.00 /lf	20,880	422.00 /lf	25,320			262.00 /lf	15,720	-	-	1,032.00 /lf	61,920
Pipe Boring 60" Casing, Bench Canal Crossing, Station 1010+00	50.00 lf	348.00 /lf	348.00 /lf	17,400	422.00 /lf	21,100			262.00 /lf	13,100	-	-	1,032.00 /lf	51,600
Pipe Boring 60" Casing, HWY 189 Crossing, Station 945+00	150.00 lf	348.00 /lf	348.00 /lf	52,200	422.00 /lf	63,300			262.00 /lf	39,300	-	-	1,032.00 /lf	154,800
Pipe Boring 60" Casing, Union Canal Crossing, Station 1003+00	50.00 lf	348.00 /lf	348.00 /lf	17,400	422.00 /lf	21,100			262.00 /lf	13,100	-	-	1,032.00 /lf	51,600
Receiving Pits	4.00 ea	450.00 /ea	450.00 /ea	1,800	1,530.00 /ea	6,120	-		1,580.00 /ea	6,320	-	-	3,560.00 /ea	14,240
Entry Pit	4.00 ea	3,430.00 /ea	3,430.00 /ea	13,720	13,000.00 /ea	52,000	-		13,450.00 /ea	53,800	-	-	29,880.00 /ea	119,520
Pipe Bore and Jack		*/lf*		*123,400*		*188,940*				*141,340*			*/lf*	*453,680*
2502.014 Pipe Bedding														
Utility Bed Gravel-Crushed	15,820.00 cy	3.30 /cy	96.64 /cd	52,206	12.00 /cy	208,824	-		11.70 /cy	185,094	-	-	28.20 /cy	446,124
Pipe Bedding		*/cy*		*52,206*		*208,824*				*185,094*			*/cy*	*446,124*
2580.500 Utility Conflicts														
Utility Conflicts	20.00 ea	21,125.00 /ea	25.00 /mh	422,500	13,685.00 /ea	273,700	-		5,680.00 /ea	113,600	-	-	40,490.00 /ea	809,800
Replace Utility Connection, Water, Sewer, Telephone, Gas, Electric	300.00 ea	507.00 /ea	507.00 /ea	152,100	500.00 /ea	150,000	-		135.00 /ea	40,500	-	-	1,142.00 /ea	342,600
Utility Conflicts		*/ea*		*574,600*		*423,700*				*154,100*			*/ea*	*1,152,400*
2630.006 Catch Basin 6'														
4" Blow-Off Drainage System, 875+00	1.00 ea		/ch		/ea		19,880		/ch		-	-	19,880.00 /ea	19,880
4" Blow-Off Drainage System, 942+00	1.00 ea		/ch		/ea		17,340		/ch		-	-	17,340.00 /ea	17,340
8" Blow-Off Drainage System, 987+00	1.00 ea		/ch		/ea		13,200		/ch		-	-	13,200.00 /ea	13,200
6" Blow-Off Drainage System, 1011+00	1.00 ea		/ch		/ea		6,560		/ch		-	-	6,560.00 /ea	6,560
Catch Basin 6'		*/ea*					*56,980*						*/ea*	*56,980*
2740.120 Asphalt Paving - SY														
Compacted Base 12", 16200 LF by 24'	43,200.00 sy	-	-	-	-	-	904,176		-	-	-	-	20.93 /sy	904,176
Bituminous Top Course 4", 13200 LF by 24'	35,200.00 sy	-	-	-	-	-	281,600		-	-	-	-	8.00 /sy	281,600
Bituminous Top Course 6", 3000 LF by 24'	8,000.00 sy	0.76 /sy	0.76 /sy	6,080	8.45 /sy	67,600			0.55 /sy	4,400	-	-	9.76 /sy	78,080
Wear Course 1 1/2", 3000 LF by 24'	8,000.00 sy	0.35 /sy	0.35 /sy	2,800	2.41 /sy	19,280			0.25 /sy	2,000	-	-	3.01 /sy	24,080
Asphalt Paving - SY		*/sy*		*8,880*		*86,880*	*1,185,776*			*6,400*			*/sy*	*1,287,936*
2770.110 Concrete Curbs & Gutters														
Curb & Gutter, Concrete, Station 850+00 to 1012+00	10,500.00 lf	1.95 /lf	53.75 /ch	20,475	7.48 /lf	78,540	-		0.60 /lf	6,300	-	-	10.03 /lf	105,315
Concrete Curbs & Gutters		*/ls*		*20,475*		*78,540*				*6,300*			*/ls*	*105,315*
2950.000 SITE RESTORATION														

Spreadsheet Level	Takeoff Quantity	Labor Cost/Unit	Labor Price	Labor Amount	Material Price	Material Amount	Sub Amount	Sub Name	Equip Price	Equip Amount	Other Price	Other Amount	Total Cost/Unit	Total Amount
2950.000 SITE RESTORATION														
Restore Landscaping	456.00 msf	30.00 /msf	30.00 /msf	13,680	50.00 /msf	22,800	-		20.00 /msf	9,120	-	-	100.00 /msf	45,600
SITE RESTORATION		*/msf*		*13,680*		*22,800*				*9,120*			*/msf*	*45,600*
3000.150 Concrete Sidewalks and Dr														
5' Sidewalks 4", Station 850+00 to 1012+00	13,500.00 lf	6.65 /lf	6.65 /lf	89,775	7.60 /lf	102,600			0.10 /lf	1,350	-	-	14.35 /lf	193,725
20' Wide Driveways Station 850+00 to 1012+00	2,100.00 lf	26.60 /lf	26.60 /lf	55,860	30.40 /lf	63,840			0.40 /lf	840	-	-	57.40 /lf	120,540
Concrete Sidewalks and Dr		*/cy*		*145,635*		*166,440*				*2,190*			*/cy*	*314,265*
15230.301 XH Pipe PE														
48" Steel Pipe, 350 psi, Mortar Lined & Coated	16,200.00 lf	24.50 /lf	16.78 /mh	396,900	207.00 /lf	3,353,400	-		12.00 /lf	194,400	-	-	243.50 /lf	3,944,700
Welding per Joint - 48"	356.00 ea	3,612.00 /ea	3,612.00 /ea	1,285,872	112.50 /ea	40,050	-		90.00 /ea	32,040	-	-	3,814.50 /ea	1,357,962
XH Pipe PE		*/lf*		*1,682,772*		*3,393,450*				*226,440*			*/lf*	*5,302,662*
15230.314 Pipe Fittings														
48" Pipe Fittings	16.00 ea	750.00 /ea	16.78 /mh	12,000	7,000.00 /ea	112,000	-		175.00 /ea	2,800	-	-	7,925.00 /ea	126,800
Pipe Fittings		*/ea*		*12,000*		*112,000*				*2,800*			*/ea*	*126,800*
15230.340 Turn Outs, Drains, Air Re														
Air Release Vault, 2"	8.00 ea	2,937.00 /ea	2,937.00 /ea	23,496	6,298.00 /ea	50,384	-		479.00 /ea	3,832	-	-	9,714.00 /ea	77,712
Air Vacuum/Air Release Vault, 10"	3.00 ea	5,078.00 /ea	5,078.00 /ea	15,234	25,672.00 /ea	77,016	-		757.00 /ea	2,271	-	-	31,507.00 /ea	94,521
Drain Vault, 4"	1.00 ea	8,997.00 /ea	8,997.00 /ea	8,997	11,041.00 /ea	11,041	-		2,080.00 /ea	2,080	-	-	22,118.00 /ea	22,118
Drain Vault, 8" w/AC	1.00 ea	9,093.00 /ea	9,093.00 /ea	9,093	23,590.00 /ea	23,590	-		2,080.00 /ea	2,080	-	-	34,763.00 /ea	34,763
Drain Vault, 4" w/AC	1.00 ea	8,997.00 /ea	8,997.00 /ea	8,997	11,341.00 /ea	11,341	-		2,080.00 /ea	2,080	-	-	22,418.00 /ea	22,418
Drain Vault, 6"	1.00 ea	9,039.00 /ea	9,039.00 /ea	9,039	15,007.00 /ea	15,007	-		2,080.00 /ea	2,080	-	-	26,126.00 /ea	26,126
Turn Outs, Drains, Air Re		*/ea*		*74,856*		*188,379*				*14,423*			*/ea*	*277,658*
16151.110 Cathodic Protection														
Cathodic Protection, Impressed Current	16,200.00 lf		/mh		/lf		16,200		-	-	-	-	1.00 /lf	16,200
Joint Seal	356.00 ea		/mh		/ea		44,500		-	-	-	-	125.00 /ea	44,500
Joint Bond	356.00 ea		/mh		/ea		21,360		-	-	-	-	60.00 /ea	21,360
Test Station at 1000 LF	16.00 ea		/mh		/ea		6,400		-	-	-	-	400.00 /ea	6,400
Cathodic Protection		*/lf*					*88,460*						*/lf*	*88,460*
811 Station 850+00 to 1012+00				**2,988,124**		**5,001,023**	**1,474,216**			**963,765**				**10,427,128**
812 Station 1012+00 to 1067+00														
2240.120 Dewatering														
Wellpoint Dewatering	2.10 mo	24,400.00 /mo	18.00 /mh	51,240	10,500.00 /mo	22,050	-		/mo		-	-	34,900.00 /mo	73,290
Dewatering		*/mo*		*51,240*		*22,050*							*/mo*	*73,290*
2316.202 Pipe Excavation														
Excavate Silt-Clay, Loam, Hydraulic Hoe	18,750.00 cy	0.94 /cy	140.08 /cd	17,625	-	-	-		1.60 /cy	30,000	-	-	2.54 /cy	47,625
Backfill and Compact, Machine	16,190.00 cy	1.53 /cy	140.08 /cd	24,771	-	-	-		0.89 /cy	14,409	-	-	2.42 /cy	39,180
Excess Material Offsite	7,340.00 cy	3.30 /cy	140.08 /cd	24,222	-	-	-		2.93 /cy	21,506	-	-	6.23 /cy	45,728
Pipe Excavation		*/cy*		*66,618*						*65,915*			*/cy*	*132,533*
2370.150 Temp Erosion Control														
Erosion Control Mats-Slopes	33,000.00 sf	0.12 /sf	12.08 /ch	3,986	2.00 /sf	72,600	-		-	-	-	-	2.32 /sf	76,586

Spreadsheet Level	Takeoff Quantity	Labor Cost/Unit	Labor Price	Labor Amount	Material Price	Material Amount	Sub Amount	Sub Name	Equip Price	Equip Amount	Other Price	Other Amount	Total Cost/Unit	Total Amount
Temp Erosion Control		/sf		3,986		72,600							/sf	76,586
2445.100 Pipe Bore and Jack														
Pipe Boring 60" Casing, HWY 52 Crossing, Station 1014+00	200.00 lf	348.00 /lf	348.00 /lf	69,600	422.00 /lf	84,400			262.00 /lf	52,400	-	-	1,032.00 /lf	206,400
Pipe Boring 60" Casing, PRC	100.00 lf	348.00 /lf	348.00 /lf	34,800	422.00 /lf	42,200			262.00 /lf	26,200	-	-	1,032.00 /lf	103,200
Receiving Pits	2.00 ea	450.00 /ea	450.00 /ea	900	1,530.00 /ea	3,060	-		1,580.00 /ea	3,160	-	-	3,560.00 /ea	7,120
Entry Pit	2.00 ea	3,430.00 /ea	3,430.00 /ea	6,860	13,000.00 /ea	26,000	-		13,450.00 /ea	26,900	-	-	29,880.00 /ea	59,760
Pipe Bore and Jack		/lf		112,160		155,660				108,660			/lf	376,480
2502.014 Pipe Bedding														
Utility Bed Gravel-Crushed	4,780.00 cy	3.30 /cy	96.64 /cd	15,774	12.00 /cy	63,096	-		11.70 /cy	55,926	-	-	28.20 /cy	134,796
Pipe Bedding		/cy		15,774		63,096				55,926			/cy	134,796
2580.500 Utility Conflicts														
Utility Conflicts	10.00 ea	21,125.00 /ea	25.00 /mh	211,250	13,685.00 /ea	136,850	-		5,680.00 /ea	56,800	-	-	40,490.00 /ea	404,900
Replace Utility Connection, Water, Sewer, Telephone, Gas, Electric	100.00 ea	507.00 /ea	507.00 /ea	50,700	500.00 /ea	50,000	-		135.00 /ea	13,500	-	-	1,142.00 /ea	114,200
Utility Conflicts		/ea		261,950		186,850				70,300			/ea	519,100
2740.120 Asphalt Paving - SY														
Compacted Base 12", 5400 LF by 24'	14,400.00 sy	-	-	-	-	-	301,392		-	-	-	-	20.93 /sy	301,392
Bituminous Top Course 6", 2500 LF by 24'	6,670.00 sy	0.76 /sy	0.76 /sy	5,069	8.45 /sy	56,362			0.55 /sy	3,669	-	-	9.76 /sy	65,099
Wear Course 1 1/2", 2500 LF by 24'	6,670.00 sy	0.35 /sy	0.35 /sy	2,335	2.41 /sy	16,075			0.25 /sy	1,668	-	-	3.01 /sy	20,077
Asphalt Paving - SY		/sy		7,404		72,436	301,392			5,336			/sy	386,568
2770.110 Concrete Curbs & Gutters														
Curb & Gutter, Concrete, Station 1020+00 to 1067+00	2,500.00 lf	1.95 /lf	53.75 /ch	4,875	7.48 /lf	18,700	-		0.60 /lf	1,500	-	-	10.03 /lf	25,075
Concrete Curbs & Gutters		/ls		4,875		18,700				1,500			/ls	25,075
2950.000 SITE RESTORATION														
Restore Landscaping	25.00 msf	30.00 /msf	30.00 /msf	750	50.00 /msf	1,250	-		20.00 /msf	500	-	-	100.00 /msf	2,500
SITE RESTORATION		/msf		750		1,250				500			/msf	2,500
3000.150 Concrete Sidewalks and Dr														
5' Sidewalks 4", Station 1012+00 to 1038+00	2,500.00 lf	6.65 /lf	6.65 /lf	16,625	7.60 /lf	19,000			0.10 /lf	250	-	-	14.35 /lf	35,875
Concrete Sidewalks and Dr		/cy		16,625		19,000				250			/cy	35,875
15230.301 XH Pipe PE														
48" Steel Pipe, 350 psi, Mortar Lined & Coated	5,500.00 lf	24.50 /lf	16.78 /mh	134,750	207.00 /lf	1,138,500	-		12.00 /lf	66,000	-	-	243.50 /lf	1,339,250
Welding per Joint - 48"	122.00 ea	3,612.00 /ea	3,612.00 /ea	440,664	112.50 /ea	13,725	-		90.00 /ea	10,980	-	-	3,814.50 /ea	465,369
XH Pipe PE		/lf		575,414		1,152,225				76,980			/lf	1,804,619
15230.314 Pipe Fittings														
48" Pipe Fittings	5.00 ea	750.00 /ea	16.78 /mh	3,750	6,200.00 /ea	31,000	-		155.00 /ea	775	-	-	7,105.00 /ea	35,525
Pipe Fittings		/ea		3,750		31,000				775			/ea	35,525
15230.340 Turn Outs, Drains, Air Re														

Spreadsheet Level	Takeoff Quantity	Labor Cost/Unit	Labor Price	Labor Amount	Material Price	Material Amount	Sub Amount	Sub Markup	Equip Price	Equip Amount	Other Price	Other Amount	Total Cost/Unit	Total Amount
15230.340 Turn Outs, Drains, Air Re														
Air Release Vault, 2"	4.00 ea	2,937.00 /ea	2,937.00 /ea	11,748	6,298.00 /ea	25,192	-		479.00 /ea	1,916	-	-	9,714.00 /ea	38,856
Turn Outs, Drains, Air Re		*/ea*		*11,748*		*25,192*				*1,916*			*/ea*	*38,856*
16151.110 Cathodic Protection														
Cathodic Protection, Impressed Current	5,500.00 lf		/mh		/lf		5,500		-	-	-	-	1.00 /lf	5,500
Joint Seal	122.00 ea		/mh		/ea		15,250		-	-	-	-	125.00 /ea	15,250
Joint Bond	122.00 ea		/mh		/ea		7,320		-	-	-	-	60.00 /ea	7,320
Test Station at 1000 LF	6.00 ea		/mh		/ea		2,400		-	-	-	-	400.00 /ea	2,400
Cathodic Protection		*/lf*					*30,470*						*/lf*	*30,470*
812 Station 1012+00 to 1067+00				**1,132,294**		**1,820,059**	**331,852**			**388,058**				**3,672,273**
813 Station 1067+00 to 1091+00														
2240.120 Dewatering														
Wellpoint Dewatering	0.90 mo	24,400.00 /mo	18.00 /mh	21,960	10,500.00 /mo	9,450	-		/mo		-	-	34,900.00 /mo	31,410
Dewatering		*/mo*		*21,960*		*9,450*							*/mo*	*31,410*
2316.202 Pipe Excavation														
Excavate Silt-Clay, Loam, Hydraulic Hoe	8,190.00 cy	0.94 /cy	140.06 /cd	7,699	-	-	-		1.60 /cy	13,104	-	-	2.54 /cy	20,803
Backfill and Compact, Machine	7,060.00 cy	1.53 /cy	140.06 /cd	10,802	-	-	-		0.89 /cy	6,283	-	-	2.42 /cy	17,085
Excess Material Offsite	3,200.00 cy	3.30 /cy	140.06 /cd	10,560	-	-	-		2.93 /cy	9,376	-	-	6.23 /cy	19,936
Pipe Excavation		*/cy*		*29,060*						*28,763*			*/cy*	*57,824*
2370.150 Temp Erosion Control														
Erosion Control Mats-Slopes	14,400.00 sf	0.12 /sf	12.08 /ch	1,740	2.00 /sf	31,680	-		-	-	-	-	2.32 /sf	33,420
Temp Erosion Control		*/sf*		*1,740*		*31,680*							*/sf*	*33,420*
2502.014 Pipe Bedding														
Utility Bed Gravel-Crushed	2,090.00 cy	3.30 /cy	96.64 /cd	6,897	12.00 /cy	27,588	-		11.70 /cy	24,453	-	-	28.20 /cy	58,938
Pipe Bedding		*/cy*		*6,897*		*27,588*				*24,453*			*/cy*	*58,938*
2580.500 Utility Conflicts														
Replace Utility Connection, Water, Sewer, Telephone, Gas, Electric	5.00 ea	507.00 /ea	507.00 /ea	2,535	500.00 /ea	2,500	-		135.00 /ea	675	-	-	1,142.00 /ea	5,710
Utility Conflicts		*/ea*		*2,535*		*2,500*				*675*			*/ea*	*5,710*
2740.120 Asphalt Paving - SY														
Compacted Base 12"	100.00 sy	-	-	-	-	-	2,093		-	-	-	-	20.93 /sy	2,093
Bituminous Top Course 4"	50.00 sy	-	-	-	-	-	400		-	-	-	-	8.00 /sy	400
Asphalt Paving - SY		*/sy*					*2,493*						*/sy*	*2,493*
2770.110 Concrete Curbs & Gutters														
Curb & Gutter, Concrete, Station 1067+00 to 1070+00	80.00 lf	1.95 /lf	53.75 /ch	156	7.48 /lf	598	-		0.60 /lf	48	-	-	10.03 /lf	802
Concrete Curbs & Gutters		*/ls*		*156*		*598*				*48*			*/ls*	*802*
2950.000 SITE RESTORATION														
Restore Landscaping	55.00 msf	30.00 /msf	30.00 /msf	1,650	50.00 /msf	2,750	-		20.00 /msf	1,100	-	-	100.00 /msf	5,500
SITE RESTORATION		*/msf*		*1,650*		*2,750*				*1,100*			*/msf*	*5,500*
3000.150 Concrete Sidewalks and Dr														

Spreadsheet Level	Takeoff Quantity	Labor Cost/Unit	Labor Price	Labor Amount	Material Price	Material Amount	Sub Amount	Sub Name	Equip Price	Equip Amount	Other Price	Other Amount	Total Cost/Unit	Total Amount
3000.150 Concrete Sidewalks and Dr														
5' Sidewalks 4", Station 1067+00 to 1070+00	80.00 lf	6.65 /lf	6.65 /lf	532	7.60 /lf	608			0.10 /lf	8	-	-	14.35 /lf	1,148
20' Wide Driveways Station 1067+00 to 1070+00	20.00 lf	26.60 /lf	26.60 /lf	532	30.40 /lf	608			0.40 /lf	8	-	-	57.40 /lf	1,148
Concrete Sidewalks and Dr		*/cy*		*1,064*		*1,216*				*16*			*/cy*	*2,296*
15230.301 XH Pipe PE														
48" Steel Pipe, 300 psi, Mortar Lined & Coated	2,400.00 lf	24.50 /lf	16.78 /mh	58,800	191.00 /lf	458,400	-		12.00 /lf	28,800	-	-	227.50 /lf	546,000
Welding per Joint - 48"	62.00 ea	3,612.00 /ea	3,612.00 /ea	223,944	112.50 /ea	6,975	-		90.00 /ea	5,580	-	-	3,814.50 /ea	236,499
XH Pipe PE		*/lf*		*282,744*		*465,375*				*34,380*			*/lf*	*782,499*
15230.314 Pipe Fittings														
48" Pipe Fittings	10.00 ea	750.00 /ea	16.78 /mh	7,500	6,200.00 /ea	62,000	-		155.00 /ea	1,550	-	-	7,105.00 /ea	71,050
Pipe Fittings		*/ea*		*7,500*		*62,000*				*1,550*			*/ea*	*71,050*
15230.340 Turn Outs, Drains, Air Re														
Air Release Vault, 2"	1.00 ea	2,937.00 /ea	2,937.00 /ea	2,937	6,298.00 /ea	6,298	-		479.00 /ea	479	-	-	9,714.00 /ea	9,714
Air Vacuum/Air Release Vault, 8"	1.00 ea	5,078.00 /ea	5,078.00 /ea	5,078	21,428.00 /ea	21,428	-		757.00 /ea	757	-	-	27,263.00 /ea	27,263
Turn Outs, Drains, Air Re		*/ea*		*8,015*		*27,726*				*1,236*			*/ea*	*36,977*
16151.110 Cathodic Protection														
Cathodic Protection, Impressed Current	2,400.00 lf		/mh		/lf		2,400		-	-	-	-	1.00 /lf	2,400
Joint Seal	62.00 ea		/mh		/ea		7,750		-	-	-	-	125.00 /ea	7,750
Joint Bond	62.00 ea		/mh		/ea		3,720		-	-	-	-	60.00 /ea	3,720
Test Station at 1000 LF	2.00 ea		/mh		/ea		800		-	-	-	-	400.00 /ea	800
Cathodic Protection		*/lf*					*14,670*						*/lf*	*14,670*
813 Station 1067+00 to 1091+00				**363,321**		**530,883**	**17,153**			**92,221**				**1,103,589**
814 Pressure Reducing Vault Provo River, Station 988+00														
2315.925 Import Fill														
Fill Gravel Process	88.00 cy	-	-	-	6.50 /cy	744	-		-	-	-	-	8.45 /cy	744
Import Fill		*/cy*				*744*							*/cy*	*744*
2317.105 Building Excavation														
Bldg Excavation Haul Offsite	120.00 cy	1.40 /cy	280.16 /cd	168	-	-	-		960.00 /cd	576	-	-	6.20 /cy	744
Building Excavation		*/cy*		*168*						*576*			*/cy*	*744*
2319.316 Bldg Fill- Gravel														
Bldg Fill Gravel	80.00 cy	1.88 /cy	376.80 /cd	151	8.00 /cy	832	-		1,120.00 /cd	448	-	-	17.88 /cy	1,431
Bldg Fill- Gravel		*/cy*		*151*		*832*				*448*			*/cy*	*1,431*
2519.310 Dresser Couplings														
Dresser Couplings 30"	9.00 ea	22.82 /ea	45.64 /ch	205	3,000.00 /ea	27,000	-		/ch		-	-	3,022.82 /ea	27,205
Dresser Couplings 42"	1.00 ea	22.82 /ea	45.64 /ch	23	4,200.00 /ea	4,200	-		/ch		-	-	4,222.82 /ea	4,223
Dresser Couplings 48"	1.00 ea	22.82 /ea	45.64 /ch	23	4,800.00 /ea	4,800	-		/ch		-	-	4,822.82 /ea	4,823
Dresser Couplings		*/ea*		*251*		*36,000*							*/ea*	*36,251*
2531.004 Manholes 4'														
Manhole 4' Flat Cover	1.00 ea	45.69 /ea	45.69 /ch	46	90.00 /ea	90	-		40.00 /ch	40	-	-	175.69 /ea	176
Manholes 4'		*/ea*		*46*		*90*				*40*			*/ea*	*176*

Spreadsheet Level 1	Takeoff Quantity	Labor Cost/Unit	Labor Price	Labor Amount	Material Price	Material Amount	Sub Amount	Sub Name	Equip Price	Equip Amount	Other Price	Other Amount	Total Cost/Unit	Total Amount
2740.830 Paving Textiles														
Geo Textile	150.00 sy	0.03 /sy	12.08 /ch	5	2.00 /sy	330	-		-	-	-	-	2.23 /sy	335
Paving Textiles		*/sy*		*5*		*330*							*/sy*	*335*
3100.120 Forms- S-O-G														
S.O.G. Edge Form < 1'	140.00 sf	1.41 /sf	15.68 /mh	198	0.75 /sf	110	-		-	-	-	-	2.20 /sf	308
Forms- S-O-G		*/sf*		*198*		*110*							*/sf*	*308*
3100.124 Forms- Suspended Slab														
Form Suspended Slab 0-15'	1,200.00 sf	1.41 /sf	15.68 /mh	1,693	1.00 /sf	1,260	-		-	-	-	-	2.46 /sf	2,953
Floor Opening Forms	64.00 lf	1.41 /lf	15.68 /mh	90	0.50 /lf	34	-		-	-	-	-	1.94 /lf	124
Slab Edge Form < 1'	140.00 sf	1.08 /sf	15.68 /mh	151	2.00 /sf	294	-		-	-	-	-	3.18 /sf	445
Forms- Suspended Slab		*/sf*		*1,935*		*1,588*							*/sf*	*3,522*
3100.180 Forms- Wall Forms														
Rented Form System 12-16'	3,920.00 sf	2.34 /sf	15.68 /mh	9,157	1.25 /sf	5,145	-		-	-	-	-	3.65 /sf	14,302
Forms- Wall Forms		*/sf*		*9,157*		*5,145*							*/sf*	*14,302*
3100.310 Forms- Strip & Oil														
Strip & Oil Suspended Slab Frm	1,200.00 sf	0.06 /sf	12.08 /mh	72	-	-	-		-	-	-	-	0.06 /sf	72
Strip & Oil Wall Forms	3,920.00 sf	0.06 /sf	12.08 /mh	237	-	-	-		-	-	-	-	0.06 /sf	237
Strip & Oil SOG Form	140.00 sf	0.06 /sf	12.08 /mh	8	-	-	-		-	-	-	-	0.06 /sf	8
Forms- Strip & Oil		*/sf*		*318*									*/sf*	*318*
3150.192 Forms- Wall Access														
Wall Bulkhead Forms	196.00 sf	4.70 /sf	15.68 /mh	922	1.00 /sf	206	-		-	-	-	-	5.75 /sf	1,128
Forms- Wall Access		*/fs*		*922*		*206*							*/fs*	*1,128*
3150.194 Forms- Wall Blockouts														
Wall Box Outs > 3'0" Sq.	192.00 sf	0.78 /sf	15.68 /mh	151	0.48 /sf	97	-		-	-	-	-	1.29 /sf	247
Forms- Wall Blockouts		*/fs*		*151*		*97*							*/fs*	*247*
3150.198 Forms- Wall Inserts														
Pour Strips	1,340.00 lf	0.78 /lf	15.68 /mh	1,050	0.18 /lf	253	-		-	-	-	-	0.97 /lf	1,304
Forms- Wall Inserts		*/fs*		*1,050*		*253*							*/fs*	*1,304*
3210.104 Rebar- by Lbs/CY														
SOG Rebar	1.11 tn	170.60 /tn	17.06 /mh	190	560.00 /tn	654	-		-	-	-	-	758.83 /tn	843
Wall Rebar	1.82 tn	170.60 /tn	17.06 /mh	310	560.00 /tn	1,067	-		-	-	-	-	758.68 /tn	1,377
Suspended Slab Rebar	2.22 tn	170.60 /tn	17.06 /mh	379	560.00 /tn	1,306	-		-	-	-	-	758.57 /tn	1,686
Rebar- by Lbs/CY		*/ton*		*878*		*3,027*							*/ton*	*3,906*
3220.110 Wire Mesh- Rolls														
Mesh Support - bricks	158.00 ea	0.03 /ea	17.06 /mh	5	0.18 /ea	30	-		-	-	-	-	0.22 /ea	35
Wire Mesh- Rolls		*/sf*		*5*		*30*							*/sf*	*35*
3310.100 Concrete- Buy														
3500 psi Concrete	44.44 cy	-	-	-	71.00 /cy	3,313	-		-	-	-	-	74.55 /cy	3,313
3500 psi Concrete	72.59 cy	-	-	-	71.00 /cy	5,412	-		-	-	-	-	74.55 /cy	5,412
3500 psi Concrete	44.44 cy	-	-	-	71.00 /cy	3,313	-		-	-	-	-	74.55 /cy	3,313
Concrete- Buy		*/cy*				*12,038*							*/cy*	*12,038*

Spreadsheet Level	Takeoff Quantity	Labor Cost/Unit	Labor Price	Labor Amount	Material Price	Material Amount	Sub Amount	Sub Name	Equip Price	Equip Amount	Other Price	Other Amount	Total Cost/Unit	Total Amount
3310.230 Place- S-O-G														
Pump Place Slab on Grade	44.44 cy	7.38 /cy	14.75 /mh	328	-	-	-		-	-	-	-	7.38 /cy	328
Place- S-O-G		*/cy*		*328*									*/cy*	*328*
3310.240 Place- Suspended Slab														
Pump Place Suspended Slab	44.44 cy	7.38 /cy	14.75 /mh	328	-	-	-		-	-	-	-	7.38 /cy	328
Place- Suspended Slab		*/cy*		*328*									*/cy*	*328*
3310.260 Place- Walls														
Pump Place Walls	72.59 cy	10.31 /cy	14.75 /mh	749	-	-	-		-	-	-	-	10.31 /cy	749
Place- Walls		*/cy*		*749*									*/cy*	*749*
3350.110 Finish Flatwork														
Finish- Hard Trowel	1,200.00 sf	0.21 /sf	14.18 /mh	254	0.03 /sf	36	-		-	-	-	-	0.24 /sf	290
Finish- Hard Trowel	1,200.00 sf	0.21 /sf	14.18 /mh	254	0.03 /sf	36	-		-	-	-	-	0.24 /sf	290
Finish- Top of Wall & Curb	140.00 sf	0.11 /sf	14.18 /mh	16	-	-	-		-	-	-	-	0.11 /sf	16
Finish Flatwork		*/sf*		*523*		*72*							*/sf*	*595*
3350.130 Patch & Grind														
Grind/Patch Walls	3,920.00 sf	0.18 /sf	12.08 /mh	706	0.01 /sf	39	-		-	-	-	-	0.19 /sf	745
Patch & Grind		*/sf*		*706*		*39*							*/sf*	*745*
3390.170 Curing														
Liquid Curing Compounds	1,200.00 sf	0.02 /sf	12.08 /mh	29	0.01 /sf	13	-		-	-	-	-	0.04 /sf	42
Liquid Curing Compounds	3,920.00 sf	0.02 /sf	12.08 /mh	95	0.01 /sf	41	-		-	-	-	-	0.04 /sf	136
Liquid Curing Compounds	1,200.00 sf	0.02 /sf	12.08 /mh	29	0.01 /sf	13	-		-	-	-	-	0.04 /sf	42
Curing		*/sf*		*153*		*66*							*/sf*	*219*
3390.180 Hardener														
Seal Floors	1,200.00 sf	0.02 /sf	12.08 /mh	29	0.05 /sf	63	-		-	-	-	-	0.08 /sf	92
Hardener		*/sf*		*29*		*63*							*/sf*	*92*
5510.100 Stairs & Ladders														
Pit Ladder	1.00 ea	20.82 /ea	41.64 /mh	21	75.00 /ea	75	-		-	-	-	-	95.82 /ea	96
Stairs & Ladders		*/ls*		*21*		*75*							*/ls*	*96*
11295.010 Valves- Butterfly Flange														
Flge Btfly Valve/Elect Oper 30"	5.00 ea	132.55 /ea	13.26 /mh	663	11,000.00 /ea	55,000	-		-	-	-	-	11,132.55 /ea	55,663
Flge Btfly Valve/Elect Oper 42"	2.00 ea	132.55 /ea	13.26 /mh	265	15,500.00 /ea	31,000	-		-	-	-	-	15,632.55 /ea	31,265
Valves- Butterfly Flange		*/ea*		*928*		*86,000*							*/ea*	*86,928*
11295.020 Valves- Regulating														
30" Sleeve Valve	3.00 ea	106.04 /ea	13.26 /mh	318	81,000.00 /ea	243,000	-		-	-	-	-	81,106.04 /ea	243,318
Valves- Regulating		*/ls*		*318*		*243,000*							*/ls*	*243,318*
15060.200 Pipe Support														
Pipe Support	9.00 ea	22.00 /ea	22.00 /ea	198	109.41 /ea	985	-		-	-	-	-	131.41 /ea	1,183
Pipe Support		*/ea*		*198*		*985*							*/ea*	*1,183*

Spreadsheet Level	Takeoff Quantity	Labor Cost/Unit	Labor Price	Labor Amount	Material Price	Material Amount	Sub Amount	Sub Name	Equip Price	Equip Amount	Other Price	Other Amount	Total Cost/Unit	Total Amount
15120.002 Bolt - Nut & Gasket Sets														
Seal, Pipe Inlet	5.00 ea	100.00 /ea	100.00 /ea	500	220.00 /ea	1,100	-		-	-	-	-	320.00 /ea	1,600
Bolt - Nut & Gasket Sets		*/ea*		*500*		*1,100*							*/ea*	*1,600*
15120.020 Exp Joint Flange SS														
30" Flow Meter	3.00 ea	250.00 /ea	250.00 /ea	750	22,000.00 /ea	66,000	-		/ea		-	-	22,250.00 /ea	66,750
Exp Joint Flange SS		*/ea*		*750*		*66,000*							*/ea*	*66,750*
15230.201 Std Wt Pipe PE														
3" Sump Pipe	150.00 lf	2.15 /lf	16.78 /mh	322	799.00 /C	1,199	-		-	-	-	-	10.14 /lf	1,521
Std Wt Pipe PE		*/lf*		*322*		*1,199*							*/lf*	*1,521*
15230.301 XH Pipe PE														
30" Pipe	240.00 lf	2.62 /lf	16.78 /mh	628	18.34 /lf	4,402	-		-	-	-	-	20.96 /lf	5,030
42" Steel Pipe	150.00 lf	24.50 /lf	16.78 /mh	3,675	185.77 /lf	27,866	-		12.00 /lf	1,800	-	-	222.27 /lf	33,341
48" Steel Pipe	50.00 lf	24.50 /lf	16.78 /mh	1,225	185.77 /lf	9,289	-		12.00 /lf	600	-	-	222.27 /lf	11,114
XH Pipe PE		*/lf*		*5,528*		*41,556*				*2,400*			*/lf*	*49,484*
15230.320 CS XH Tee														
42" Tee	2.00 ea	383.26 /ea	16.78 /mh	767	6,439.00 /ea	12,878	-		-	-	-	-	6,822.26 /ea	13,645
48" Tee	1.00 ea	383.26 /ea	16.78 /mh	383	6,439.00 /ea	6,439	-		-	-	-	-	6,822.26 /ea	6,822
CS XH Tee		*/ea*		*1,150*		*19,317*							*/ea*	*20,467*
15230.330 CS XH Con Red														
48 x 30 Reducer	4.00 ea	183.41 /ea	16.78 /mh	734	3,167.00 /ea	12,668	-		-	-	-	-	3,350.41 /ea	13,402
42 x 30 Reducer	2.00 ea	183.41 /ea	16.78 /mh	367	3,167.00 /ea	6,334	-		-	-	-	-	3,350.41 /ea	6,701
CS XH Con Red		*/ea*		*1,100*		*19,002*							*/ea*	*20,102*
15820.002 Duct Accessories														
Intake Duct	1.00 ea	150.00 /ea	150.00 /ea	150	200.00 /ea	200			-	-	-	-	350.00 /ea	350
Duct Accessories		*/ls*		*150*		*200*							*/ls*	*350*
15830.002 Fans														
Exhaust Fan	1.00 ea	250.00 /ea	250.00 /ea	250	2,500.00 /ea	2,500			-	-	-	-	2,750.00 /ea	2,750
Fans		*/ls*		*250*		*2,500*							*/ls*	*2,750*
16000.001 Electrical Sub														
120 Volt Meter/Disconnect/Wire	1.00 ls	-	-	-	-	-	15,000		-	-	-	-	15,000.00 /ls	15,000
Remote Telemetry/Antenna/Wiring	1.00 ls	-	-	-	-	-	***20,000***		-	-	-	-	20,000.00 /ls	20,000
Electrical Sub		*/sf*					*35,000*						*/sf*	*35,000*
814 Pressure Reducing Vault Provo River, Station 388+00				**29,263**		**541,663**	**35,000**			**3,464**				**609,390**
815 PRC Drainage Structure, Station 1011+00														
2315.925 Import Fill														
Fill Gravel Process	6.67 cy	-	-	-	6.50 /cy	56	-		-	-	-	-	8.45 /cy	56
Fill Gravel Process	15.56 cy	-	-	-	6.50 /cy	131	-		-	-	-	-	8.45 /cy	131
Import Fill		*/cy*				*188*							*/cy*	*188*
2317.105 Building Excavation														
Bldg Excavation Haul Offsite	80.00 cy	1.40 /cy	280.16 /cd	112	-	-	-		960.00 /cd	384	-	-	6.20 /cy	496
Bldg Excavation Haul Offsite	186.67 cy	1.40 /cy	280.16 /cd	261	-	-	-		960.00 /cd	896	-	-	6.20 /cy	1,157

Spreadsheet Level	Takeoff Quantity	Labor Cost/Unit	Labor Price	Labor Amount	Material Price	Material Amount	Sub Amount	Sub Name	Equip Price	Equip Amount	Other Price	Other Amount	Total Cost/Unit	Total Amount
Building Excavation		*/cy*		*374*						*1,280*			*/cy*	*1,654*
2319.316 Bldg Fill- Gravel														
Bldg Fill Gravel	6.67 cy	1.88 /cy	376.80 /cd	13	8.00 /cy	69	-		1,120.00 /cd	37	-	-	17.89 /cy	119
Bldg Fill Gravel	15.56 cy	1.88 /cy	376.80 /cd	29	8.00 /cy	162	-		1,120.00 /cd	87	-	-	17.88 /cy	278
Bldg Fill- Gravel		*/cy*		*42*		*231*				*124*			*/cy*	*397*
2519.310 Dresser Couplings														
Dresser Couplings 42"	4.00 ea	22.82 /ea	45.64 /ch	91	4,200.00 /ea	16,800	-		/ch		-	-	4,222.82 /ea	16,891
Dresser Couplings		*/ea*		*91*		*16,800*							*/ea*	*16,891*
2531.004 Manholes 4'														
Manhole 4' Flat Cover	1.00 ea	45.69 /ea	45.69 /ch	46	90.00 /ea	90	-		40.00 /ch	40	-	-	175.69 /ea	176
Manholes 4'		*/ea*		*46*		*90*				*40*			*/ea*	*176*
2740.830 Paving Textiles														
Geo Textile	120.00 sy	0.03 /sy	12.08 /ch	4	2.00 /sy	264	-		-	-	-	-	2.23 /sy	268
Paving Textiles		*/sy*		*4*		*264*							*/sy*	*268*
3100.120 Forms- S-O-G														
S.O.G. Edge Form < 1'	72.00 sf	1.41 /sf	15.68 /mh	102	0.75 /sf	57	-		-	-	-	-	2.20 /sf	158
S.O.G. Edge Form < 1'	104.00 sf	1.41 /sf	15.68 /mh	147	0.75 /sf	82	-		-	-	-	-	2.20 /sf	229
Forms- S-O-G		*/sf*		*248*		*139*							*/sf*	*387*
3100.124 Forms- Suspended Slab														
Form Suspended Slab 0-15'	180.00 sf	1.41 /sf	15.68 /mh	254	1.00 /sf	189	-		-	-	-	-	2.46 /sf	443
Floor Opening Forms	66.00 lf	1.41 /lf	15.68 /mh	93	0.50 /lf	35	-		-	-	-	-	1.94 /lf	128
Slab Edge Form < 1'	72.00 sf	1.08 /sf	15.68 /mh	78	2.00 /sf	151	-		-	-	-	-	3.18 /sf	229
Forms- Suspended Slab		*/sf*		*425*		*375*							*/sf*	*800*
3100.180 Forms- Wall Forms														
Rented Form System 8-12'	1,440.00 sf	2.34 /sf	15.68 /mh	3,364	1.25 /sf	1,890	-		-	-	-	-	3.65 /sf	5,254
Forms- Wall Forms		*/sf*		*3,364*		*1,890*							*/sf*	*5,254*
3100.310 Forms- Strip & Oil														
Strip & Oil Suspended Slab Frm	180.00 sf	0.06 /sf	12.08 /mh	11	-	-	-		-	-	-	-	0.06 /sf	11
Strip & Oil Wall Forms	1,440.00 sf	0.06 /sf	12.08 /mh	87	-	-	-		-	-	-	-	0.06 /sf	87
Strip & Oil SOG Form	72.00 sf	0.06 /sf	12.08 /mh	4	-	-	-		-	-	-	-	0.06 /sf	4
Strip & Oil SOG Form	104.00 sf	0.06 /sf	12.08 /mh	6	-	-	-		-	-	-	-	0.06 /sf	6
Forms- Strip & Oil		*/sf*		*108*									*/sf*	*108*
3150.192 Forms- Wall Access														
Wall Bulkhead Forms	60.00 sf	4.70 /sf	15.68 /mh	282	1.00 /sf	63	-		-	-	-	-	5.75 /sf	345
Forms- Wall Access		*/fs*		*282*		*63*							*/fs*	*345*
3150.198 Forms- Wall Inserts														
Pour Strips	252.00 lf	0.78 /lf	15.68 /mh	198	0.18 /lf	48	-		-	-	-	-	0.97 /lf	245
Forms- Wall Inserts		*/fs*		*198*		*48*							*/fs*	*245*
3210.104 Rebar- by Lbs/CY														
SOG Rebar	0.17 tn	170.60 /tn	17.06 /mh	28	560.00 /tn	98	-		-	-	-	-	757.40 /tn	126
SOG Rebar	0.39 tn	170.60 /tn	17.06 /mh	66	560.00 /tn	228	-		-	-	-	-	757.94 /tn	295

Spreadsheet Level	Takeoff Quantity	Labor Cost/Unit	Labor Price	Labor Amount	Material Price	Material Amount	Sub Amount	Sub Name	Equip Price	Equip Amount	Other Price	Other Amount	Total Cost/Unit	Total Amount
3210.104 Rebar- by Lbs/CY														
Wall Rebar	0.67 tn	170.60 /tn	17.06 /mh	114	560.00 /tn	392	-		-	-	-	-	758.30 /tn	506
Suspended Slab Rebar	0.33 tn	170.60 /tn	17.06 /mh	57	560.00 /tn	196	-		-	-	-	-	759.20 /tn	253
Rebar- by Lbs/CY		*/ton*		*265*		*914*							*/ton*	*1,160*
3220.110 Wire Mesh- Rolls														
Mesh Support - bricks	33.00 ea	0.03 /ea	17.06 /mh	1	0.18 /ea	6	-		-	-	-	-	0.22 /ea	7
Mesh Support - bricks	65.00 ea	0.03 /ea	17.06 /mh	2	0.18 /ea	12	-		-	-	-	-	0.22 /ea	15
Wire Mesh- Rolls		*/sf*		*3*		*19*							*/sf*	*22*
3310.100 Concrete- Buy														
3500 psi Concrete	6.67 cy	-	-	-	71.00 /cy	497	-		-	-	-	-	74.55 /cy	497
3500 psi Concrete	26.67 cy	-	-	-	71.00 /cy	1,988	-		-	-	-	-	74.55 /cy	1,988
3500 psi Concrete	6.67 cy	-	-	-	71.00 /cy	497	-		-	-	-	-	74.55 /cy	497
3500 psi Concrete	15.56 cy	-	-	-	71.00 /cy	1,160	-		-	-	-	-	74.55 /cy	1,160
Concrete- Buy		*/cy*				*4,142*							*/cy*	*4,142*
3310.230 Place- S-O-G														
Pump Place Slab on Grade	6.67 cy	7.38 /cy	14.75 /mh	49	-	-	-		-	-	-	-	7.38 /cy	49
Pump Place Slab on Grade	15.56 cy	7.38 /cy	14.75 /mh	115	-	-	-		-	-	-	-	7.38 /cy	115
Place- S-O-G		*/cy*		*164*									*/cy*	*164*
3310.240 Place- Suspended Slab														
Pump Place Suspended Slab	6.67 cy	7.38 /cy	14.75 /mh	49	-	-	-		-	-	-	-	7.38 /cy	49
Place- Suspended Slab		*/cy*		*49*									*/cy*	*49*
3310.260 Place- Walls														
Pump Place Walls	26.67 cy	10.31 /cy	14.75 /mh	275	-	-	-		-	-	-	-	10.31 /cy	275
Place- Walls		*/cy*		*275*									*/cy*	*275*
3350.110 Finish Flatwork														
Finish- Hard Trowel	180.00 sf	0.21 /sf	14.18 /mh	38	0.03 /sf	5	-		-	-	-	-	0.24 /sf	43
Finish- Hard Trowel	180.00 sf	0.21 /sf	14.18 /mh	38	0.03 /sf	5	-		-	-	-	-	0.24 /sf	43
Finish- Hard Trowel	420.00 sf	0.21 /sf	14.18 /mh	89	0.03 /sf	13	-		-	-	-	-	0.24 /sf	101
Finish- Top of Wall & Curb	72.00 sf	0.11 /sf	14.18 /mh	8	-	-	-		-	-	-	-	0.11 /sf	8
Finish Flatwork		*/sf*		*173*		*23*							*/sf*	*196*
3350.130 Patch & Grind														
Grind/Patch Walls	1,440.00 sf	0.18 /sf	12.08 /mh	259	0.01 /sf	14	-		-	-	-	-	0.19 /sf	274
Patch & Grind		*/sf*		*259*		*14*							*/sf*	*274*
3390.170 Curing														
Liquid Curing Compounds	180.00 sf	0.02 /sf	12.08 /mh	4	0.01 /sf	2	-		-	-	-	-	0.04 /sf	6
Liquid Curing Compounds	1,440.00 sf	0.02 /sf	12.08 /mh	35	0.01 /sf	15	-		-	-	-	-	0.04 /sf	50
Liquid Curing Compounds	180.00 sf	0.02 /sf	12.08 /mh	4	0.01 /sf	2	-		-	-	-	-	0.04 /sf	6
Liquid Curing Compounds	420.00 sf	0.02 /sf	12.08 /mh	10	0.01 /sf	4	-		-	-	-	-	0.04 /sf	15
Curing		*/sf*		*54*		*23*							*/sf*	*77*
3390.180 Hardener														

Spreadsheet Level	Takeoff Quantity	Labor Cost/Unit	Labor Price	Labor Amount	Material Price	Material Amount	Sub Amount	Sub Name	Equip Price	Equip Amount	Other Price	Other Amount	Total Cost/Unit	Total Amount
3390.160 Hardener														
Seal Floors	180.00 sf	0.02 /sf	12.08 /mh	4	0.05 /sf	9	-		-	-	-	-	0.08 /sf	14
Seal Floors	420.00 sf	0.02 /sf	12.08 /mh	10	0.05 /sf	22	-		-	-	-	-	0.08 /sf	32
Hardener		*/sf*		*15*		*32*							*/sf*	*46*
5510.100 Stairs & Ladders														
Pit Ladder	1.00 ea	20.82 /ea	41.64 /mh	21	75.00 /ea	75	-		-	-	-	-	95.82 /ea	96
Stairs & Ladders		*/ls*		*21*		*75*							*/ls*	*96*
5530.200 Grating- Steel Galvanized														
Gal Steel Floor Grating 1.25"	90.00 sf	0.57 /sf	16.14 /mh	51	5.00 /sf	450	-		-	-	-	-	5.57 /sf	501
Grating- Steel Galvanized		*/sf*		*51*		*450*							*/sf*	*501*
11295.020 Valves- Regulating														
Flap Valve	1.00 ea	106.04 /ea	13.26 /mh	106	5,800.00 /ea	5,800	-		-	-	-	-	5,906.04 /ea	5,906
Valves- Regulating		*/ls*		*106*		*5,800*							*/ls*	*5,906*
11392.010 Weirs														
Weir, Steel	30.00 lf	232.47 /lf	15.50 /mh	6,974	2.50 /lf	75	-		-	-	-	-	234.97 /lf	7,049
Weirs		*/ea*		*6,974*		*75*							*/ea*	*7,049*
15120.002 Bolt - Nut & Gasket Sets														
Seal, Pipe Inlet	1.00 ea	100.00 /ea	100.00 /ea	100	220.00 /ea	220	-		-	-	-	-	320.00 /ea	320
Bolt - Nut & Gasket Sets		*/ea*		*100*		*220*							*/ea*	*320*
15230.301 XH Pipe PE														
42" Steel Pipe	140.00 lf	24.50 /lf	16.78 /mh	3,430	185.77 /lf	26,008	-		12.00 /lf	1,680	-	-	222.27 /lf	31,118
XH Pipe PE		*/lf*		*3,430*		*26,008*				*1,680*			*/lf*	*31,118*
15230.320 CS XH Tee														
42" 90 Ell	2.00 ea	383.26 /ea	16.78 /mh	767	6,439.00 /ea	12,878	-		-	-	-	-	6,822.26 /ea	13,645
CS XH Tee		*/ea*		*767*		*12,878*							*/ea*	*13,645*
815 PRC Drainage Structure, Station 1011+00				**17,887**		**70,760**				**3,124**				**91,771**
816 Alpine Aqueduct Connection, Station 1092+00														
2240.120 Dewatering														
Wellpoint Dewatering	0.90 mo	24,400.00 /mo	18.00 /mh	21,960	10,500.00 /mo	9,450	-		/mo		-	-	34,900.00 /mo	31,410
Dewatering		*/mo*		*21,960*		*9,450*							*/mo*	*31,410*
2315.925 Import Fill														
Fill Gravel Process	26.89 cy	-	-	-	6.50 /cy	244	-		-	-	-	-	8.45 /cy	244
Import Fill		*/cy*				*244*							*/cy*	*244*
2316.202 Pipe Excavation														
Excavate Silt-Clay, Loam, Hydraulic Hoe	8,190.00 cy	0.94 /cy	140.08 /cd	7,699	-	-	-		1.60 /cy	13,104	-	-	2.54 /cy	20,803
Backfill and Compact, Machine	7,060.00 cy	1.53 /cy	140.08 /cd	10,802	-	-	-		0.89 /cy	6,283	-	-	2.42 /cy	17,085
Excess Material Offsite	3,200.00 cy	3.30 /cy	140.08 /cd	10,560	-	-	-		2.93 /cy	9,376	-	-	6.23 /cy	19,936
Pipe Excavation		*/cy*		*29,060*						*28,763*			*/cy*	*57,824*
2317.105 Building Excavation														
Bldg Excavation Haul Offsite	693.33 cy	1.40 /cy	280.16 /cd	971	-	-	-		960.00 /cd	3,328	-	-	6.20 /cy	4,299
Building Excavation		*/cy*		*971*						*3,328*			*/cy*	*4,299*

Spreadsheet Level	Takeoff Quantity	Labor Cost/Unit	Labor Price	Labor Amount	Material Price	Material Amount	Sub Amount	Sub Name	Equip Price	Equip Amount	Other Price	Other Amount	Total Cost/Unit	Total Amount
2319.316 Bldg Fill- Gravel														
Bldg Fill Gravel	28.89 cy	1.88 /cy	376.80 /cd	54	/cy		-		1,120.00 /cd	162	-	-	7.48 /cy	216
Bldg Fill- Gravel		*/cy*		*54*						*162*			*/cy*	*216*
2370.150 Temp Erosion Control														
Erosion Control Mats-Slopes	14,400.00 sf	0.12 /sf	12.08 /ch	1,740	2.00 /sf	31,680	-		-	-	-	-	2.32 /sf	33,420
Temp Erosion Control		*/sf*		*1,740*		*31,680*							*/sf*	*33,420*
2502.014 Pipe Bedding														
Utility Bed Gravel-Crushed	2,090.00 cy	3.30 /cy	96.64 /cd	6,897	12.00 /cy	27,588	-		11.70 /cy	24,453	-	-	28.20 /cy	58,938
Pipe Bedding		*/cy*		*6,897*		*27,588*				*24,453*			*/cy*	*58,938*
2502.020 Concrete Thrust Blocks														
3500 psi Thrust Block Concrete	150.00 cy	-	-	-	66.00 /cy	10,395	-		-	-	-	-	69.30 /cy	10,395
Concrete Thrust Blocks		*/cy*				*10,395*							*/cy*	*10,395*
2519.310 Dresser Couplings														
Dresser Couplings 48"	4.00 ea	22.82 /ea	45.64 /ch	91	4,800.00 /ea	19,200	-		/ch		-	-	4,822.82 /ea	19,291
Dresser Couplings		*/ea*		*91*		*19,200*							*/ea*	*19,291*
2531.004 Manholes 4'														
Manhole Cover	1.00 ea	45.69 /ea	45.69 /ch	46	90.00 /ea	90	-		40.00 /ch	40	-	-	175.69 /ea	176
Manholes 4'		*/ea*		*46*		*90*				*40*			*/ea*	*176*
2950.000 SITE RESTORATION														
Restore Landscaping	55.00 msf	30.00 /msf	30.00 /msf	1,650	50.00 /msf	2,750	-		20.00 /msf	1,100	-	-	100.00 /msf	5,500
SITE RESTORATION		*/msf*		*1,650*		*2,750*				*1,100*			*/msf*	*5,500*
3100.120 Forms- S-O-G														
S.O.G. Edge Form < 1'	112.00 sf	1.41 /sf	15.68 /mh	158	0.75 /sf	88	-		-	-	-	-	2.20 /sf	246
Forms- S-O-G		*/sf*		*158*		*88*							*/sf*	*246*
3100.124 Forms- Suspended Slab														
Form Suspended Slab 0-15'	720.00 sf	1.41 /sf	15.68 /mh	1,016	1.00 /sf	756	-		-	-	-	-	2.46 /sf	1,772
Floor Opening Forms	64.00 lf	1.41 /lf	15.68 /mh	90	0.50 /lf	34	-		-	-	-	-	1.94 /lf	124
Slab Edge Form < 1'	108.00 sf	1.08 /sf	15.68 /mh	117	2.00 /sf	227	-		-	-	-	-	3.18 /sf	344
Forms- Suspended Slab		*/sf*		*1,223*		*1,016*							*/sf*	*2,239*
3100.180 Forms- Wall Forms														
Rented Form System 16'->	5,376.00 sf	2.34 /sf	15.68 /mh	12,558	1.25 /sf	7,056	-		-	-	-	-	3.65 /sf	19,614
Forms- Wall Forms		*/sf*		*12,558*		*7,056*							*/sf*	*19,614*
3100.310 Forms- Strip & Oil														
Strip & Oil Suspended Slab Frm	720.00 sf	0.06 /sf	12.08 /mh	43	-	-	-		-	-	-	-	0.06 /sf	43
Strip & Oil Wall Forms	5,376.00 sf	0.06 /sf	12.08 /mh	325	-	-	-		-	-	-	-	0.06 /sf	325
Strip & Oil SOG Form	112.00 sf	0.06 /sf	12.08 /mh	7	-	-	-		-	-	-	-	0.06 /sf	7
Forms- Strip & Oil		*/sf*		*375*									*/sf*	*375*
3150.192 Forms- Wall Access														
Wall Bulkhead Forms	240.00 sf	4.70 /sf	15.68 /mh	1,129	1.00 /sf	252	-		-	-	-	-	5.75 /sf	1,381

Spreadsheet Level	Takeoff Quantity	Labor Cost/Unit	Labor Price	Labor Amount	Material Price	Material Amount	Sub Amount	Sub Name	Equip Price	Equip Amount	Other Price	Other Amount	Total Cost/Unit	Total Amount
Forms- Wall Access		*/ls*		*1,129*		*252*							*/ls*	*1,381*
3150.194 Forms- Wall Blockouts														
Wall Box Outs > 3'0" Sq.	192.00 sf	0.78 /sf	15.68 /mh	151	0.48 /sf	97	-		-	-	-	-	1.29 /sf	247
Forms- Wall Blockouts		*/ls*		*151*		*97*							*/ls*	*247*
3150.198 Forms- Wall Inserts														
Pour Strips	828.00 lf	0.78 /lf	15.68 /mh	649	0.18 /lf	156	-		-	-	-	-	0.97 /lf	806
Forms- Wall Inserts		*/ls*		*649*		*156*							*/ls*	*806*
3210.104 Rebar- by Lbs/CY														
SOG Rebar	0.72 tn	170.60 /tn	17.06 /mh	123	560.00 /tn	424	-		-	-	-	-	758.52 /tn	548
Wall Rebar	2.49 tn	170.60 /tn	17.06 /mh	425	560.00 /tn	1,463	-		-	-	-	-	758.50 /tn	1,888
Suspended Slab Rebar	1.33 tn	170.60 /tn	17.06 /mh	227	560.00 /tn	784	-		-	-	-	-	758.75 /tn	1,011
Rebar- by Lbs/CY		*/ton*		*776*		*2,672*							*/ton*	*3,447*
3220.110 Wire Mesh- Rolls														
Mesh Support - bricks	107.00 ea	0.03 /ea	17.06 /mh	4	0.18 /ea	20	-		-	-	-	-	0.22 /ea	24
Wire Mesh- Rolls		*/sf*		*4*		*20*							*/sf*	*24*
3310.100 Concrete- Buy														
3500 psi Concrete	28.89 cy	-	-	-	71.00 /cy	2,154	-		-	-	-	-	74.55 /cy	2,154
3500 psi Concrete	99.56 cy	-	-	-	71.00 /cy	7,422	-		-	-	-	-	74.55 /cy	7,422
3500 psi Concrete	26.67 cy	-	-	-	71.00 /cy	1,988	-		-	-	-	-	74.55 /cy	1,988
Concrete- Buy		*/cy*				*11,563*							*/cy*	*11,563*
3310.230 Place- S-O-G														
Pump Place Slab on Grade	28.89 cy	7.38 /cy	14.75 /mh	213	-	-	-		-	-	-	-	7.38 /cy	213
Place- S-O-G		*/cy*		*213*									*/cy*	*213*
3310.240 Place- Suspended Slab														
Pump Place Suspended Slab	26.67 cy	7.38 /cy	14.75 /mh	197	-	-	-		-	-	-	-	7.38 /cy	197
Place- Suspended Slab		*/cy*		*197*									*/cy*	*197*
3310.260 Place- Walls														
Pump Place Walls	99.56 cy	10.31 /cy	14.75 /mh	1,027	-	-	-		-	-	-	-	10.31 /cy	1,027
Place- Walls		*/cy*		*1,027*									*/cy*	*1,027*
3350.110 Finish Flatwork														
Finish- Hard Trowel	780.00 sf	0.21 /sf	14.18 /mh	165	0.03 /sf	23	-		-	-	-	-	0.24 /sf	188
Finish- Hard Trowel	720.00 sf	0.21 /sf	14.18 /mh	152	0.03 /sf	22	-		-	-	-	-	0.24 /sf	174
Finish- Top of Wall & Curb	112.00 sf	0.11 /sf	14.18 /mh	13	-	-	-		-	-	-	-	0.11 /sf	13
Finish Flatwork		*/sf*		*330*		*45*							*/sf*	*375*
3350.130 Patch & Grind														
Grind/Patch Walls	5,376.00 sf	0.18 /sf	12.08 /mh	968	0.01 /sf	54	-		-	-	-	-	0.19 /sf	1,021
Patch & Grind		*/sf*		*968*		*54*							*/sf*	*1,021*
3390.170 Curing														
Liquid Curing Compounds	780.00 sf	0.02 /sf	12.08 /mh	19	0.01 /sf	8	-		-	-	-	-	0.04 /sf	27
Liquid Curing Compounds	5,376.00 sf	0.02 /sf	12.08 /mh	130	0.01 /sf	56	-		-	-	-	-	0.04 /sf	186

Spreadsheet Level	Takeoff Quantity	Labor Cost/Unit	Labor Price	Labor Amount	Material Price	Material Amount	Sub Amount	Sub Name	Equip Price	Equip Amount	Other Price	Other Amount	Total Cost/Unit	Total Amount
3390.170 Curing														
Liquid Curing Compounds	720.00 sf	0.02 /sf	12.08 /mh	17	0.01 /sf	8	-		-	-	-	-	0.04 /sf	25
Curing		*/sf*		*166*		*72*							*/sf*	*238*
3390.180 Hardener														
Seal Floors	780.00 sf	0.02 /sf	12.08 /mh	19	0.05 /sf	41	-		-	-	-	-	0.08 /sf	60
Hardener		*/sf*		*19*		*41*							*/sf*	*60*
5510.100 Stairs & Ladders														
Pit Ladder	1.00 ea	20.82 /ea	41.64 /mh	21	75.00 /ea	75	-		-	-	-	-	95.82 /ea	96
Stairs & Ladders		*/ls*		*21*		*75*							*/ls*	*96*
15230.301 XH Pipe PE														
48" Steel Pipe, 300 psi, Mortar Lined & Coated	2,400.00 lf	24.50 /lf	16.78 /mh	58,800	160.66 /lf	385,584	-		12.00 /lf	28,800	-	-	197.16 /lf	473,184
Welding per Joint - 48"	70.00 ea	3,612.00 /ea	3,612.00 /ea	252,840	112.50 /ea	7,875	-		90.00 /ea	6,300	-	-	3,814.50 /ea	267,015
XH Pipe PE		*/lf*		*311,640*		*393,459*				*35,100*			*/lf*	*740,199*
15230.314 Pipe Fittings														
48" Pipe Fittings	10.00 ea	750.00 /ea	16.78 /mh	7,500	6,200.00 /ea	62,000	-		155.00 /ea	1,550	-	-	7,105.00 /ea	71,050
Pipe Fittings		*/ea*		*7,500*		*62,000*				*1,550*			*/ea*	*71,050*
15820.002 Duct Accessories														
Air Vent	1.00 ea	150.00 /ea	150.00 /ea	150	200.00 /ea	200			-	-	-	-	350.00 /ea	350
Duct Accessories		*/ls*		*150*		*200*							*/ls*	*350*
16151.110 Cathodic Protection														
Cathodic Protection, Impressed Current	2,400.00 lf		/mh		/lf		2,400		-	-	-	-	1.00 /lf	2,400
Joint Seal	70.00 ea		/mh		/ea		8,750		-	-	-	-	125.00 /ea	8,750
Joint Bond	70.00 ea		/mh		/ea		4,200		-	-	-	-	60.00 /ea	4,200
Test Station at 1000 LF	2.00 ea		/mh		/ea		800		-	-	-	-	400.00 /ea	800
Insulating Flange Kits	1.00 ea		/mh		/ea		800		-	-	-	-	800.00 /ea	800
PCR Kits	1.00 ea		/mh		/ea		2,000		-	-	-	-	2,000.00 /ea	2,000
Cathodic Protection		*/lf*					*18,950*						*/lf*	*18,950*
816 Alpine Aqueduct Connection, Station 1092+00				**401,720**		**580,284**	**18,950**			**94,496**				**1,095,430**
817 48" Valve Vault, Station 1011+00														
3100.120 Forms- S-O-G														
S.O.G. Edge Form < 1'	64.00 sf	3.84 /sf	42.70 /mh	246	0.75 /sf	50	-		-	-	-	-	4.63 /sf	296
Forms- S-O-G		*/sf*		*246*		*50*							*/sf*	*296*
3100.124 Forms- Suspended Slab														
Form Suspended Slab 0-15'	256.00 sf	3.84 /sf	42.70 /mh	984	1.00 /sf	269	-		-	-	-	-	4.89 /sf	1,253
Floor Opening Forms	32.00 lf	3.84 /lf	42.70 /mh	123	0.50 /lf	17	-		-	-	-	-	4.37 /lf	140
Slab Edge Form < 1'	56.00 sf	2.95 /sf	42.70 /mh	165	2.00 /sf	118	-		-	-	-	-	5.05 /sf	283
Forms- Suspended Slab		*/sf*		*1,272*		*403*							*/sf*	*1,675*
3100.180 Forms- Wall Forms														
Rented Form System 12-16'	1,920.00 sf	6.36 /sf	42.70 /mh	12,216	1.25 /sf	2,520	-		-	-	-	-	7.68 /sf	14,736
Forms- Wall Forms		*/sf*		*12,216*		*2,520*							*/sf*	*14,736*

Spreadsheet Level	Est. Takeoff Quantity	Labor Cost/Unit	Labor Price	Labor Amount	Material Price	Material Amount	Sub Amount	Sub Name	Equip Price	Equip Amount	Other Price	Other Amount	Total Cost/Unit	Total Amount
3100.310 Forms- Strip & Oil														
Strip & Oil Suspended Slab Frm	256.00 sf	0.15 /sf	29.99 /mh	38	-	-	-		-	-	-	-	0.15 /sf	38
Strip & Oil Wall Forms	1,920.00 sf	0.15 /sf	29.99 /mh	288	-	-	-		-	-	-	-	0.15 /sf	288
Strip & Oil SOG Form	64.00 sf	0.15 /sf	29.99 /mh	10	-	-	-		-	-	-	-	0.15 /sf	10
Forms- Strip & Oil		*/sf*		*336*									*/sf*	*336*
3150.192 Forms- Wall Access														
Wall Bulkhead Forms	120.00 sf	12.81 /sf	42.70 /mh	1,537	1.00 /sf	126	-		-	-	-	-	13.86 /sf	1,663
Forms- Wall Access		*/s*		*1,537*		*126*							*/s*	*1,663*
3150.198 Forms- Wall Inserts														
Pour Strips	312.00 lf	2.14 /lf	42.70 /mh	666	0.18 /lf	59	-		-	-	-	-	2.32 /lf	725
Forms- Wall Inserts		*/s*		*666*		*59*							*/s*	*725*
3210.104 Rebar- by Lbs/CY														
SOG Rebar	0.19 tn	474.70 /tn	47.47 /mh	90	560.00 /tn	112	-		-	-	-	-	1,064.16 /tn	202
Wall Rebar	1.33 tn	474.70 /tn	47.47 /mh	633	560.00 /tn	785	-		-	-	-	-	1,062.83 /tn	1,418
Suspended Slab Rebar	0.47 tn	474.70 /tn	47.47 /mh	225	560.00 /tn	279	-		-	-	-	-	1,063.06 /tn	504
Rebar- by Lbs/CY		*/ton*		*948*		*1,175*							*/ton*	*2,124*
3220.110 Wire Mesh- Rolls														
Mesh Support - bricks	41.00 ea	0.10 /ea	47.47 /mh	4	0.18 /ea	8	-		-	-	-	-	0.28 /ea	12
Wire Mesh- Rolls		*/sf*		*4*		*8*							*/sf*	*12*
3310.100 Concrete- Buy														
3500 psi Concrete	9.48 cy	-	-	-	71.00 /cy	707	-		-	-	-	-	74.55 /cy	707
3500 psi Concrete	35.56 cy	-	-	-	71.00 /cy	2,651	-		-	-	-	-	74.55 /cy	2,651
3500 psi Concrete	9.48 cy	-	-	-	71.00 /cy	707	-		-	-	-	-	74.55 /cy	707
Concrete- Buy		*/cy*				*4,064*							*/cy*	*4,064*
3310.230 Place- S-O-G														
Truck Place Slab on Grade	9.48 cy	17.84 /cy	39.65 /mh	169	-	-	-		-	-	-	-	17.84 /cy	169
Place- S-O-G		*/cy*		*169*									*/cy*	*169*
3310.240 Place- Suspended Slab														
Crane Place Suspended Slab	9.48 cy	27.72 /cy	39.65 /mh	263	-	-	-		-	-	-	-	27.72 /cy	263
Place- Suspended Slab		*/cy*		*263*									*/cy*	*263*
3310.260 Place- Walls														
Truck Place Walls	35.56 cy	21.81 /cy	39.65 /mh	775	-	-	-		-	-	-	-	21.81 /cy	775
Place- Walls		*/cy*		*775*									*/cy*	*775*
3350.110 Finish Flatwork														
Finish- Hard Trowel	256.00 sf	0.48 /sf	32.31 /mh	123	0.03 /sf	8	-		-	-	-	-	0.51 /sf	131
Finish- Hard Trowel	256.00 sf	0.48 /sf	32.31 /mh	123	0.03 /sf	8	-		-	-	-	-	0.51 /sf	131
Finish- Top of Wall & Curb	64.00 sf	0.26 /sf	32.31 /mh	17	-	-	-		-	-	-	-	0.26 /sf	17
Finish Flatwork		*/sf*		*263*		*15*							*/sf*	*278*
3350.130 Patch & Grind														
Grind/Patch Walls	1,920.00 sf	0.45 /sf	29.99 /mh	858	0.01 /sf	19	-		-	-	-	-	0.46 /sf	877
Patch & Grind		*/sf*		*858*		*19*							*/sf*	*877*

Spreadsheet Level	Takeoff Quantity	Labor Cost/Unit	Labor Price	Labor Amount	Material Price	Material Amount	Sub Amount	Sub Name	Equip Price	Equip Amount	Other Price	Other Amount	Total Cost/Unit	Total Amount
3390.170 Curing														
Liquid Curing Compounds	256.00 sf	0.06 /sf	29.99 /mh	15	0.01 /sf	3	-		-	-	-	-	0.07 /sf	18
Liquid Curing Compounds	1,920.00 sf	0.06 /sf	29.99 /mh	115	0.01 /sf	20	-		-	-	-	-	0.07 /sf	135
Liquid Curing Compounds	256.00 sf	0.06 /sf	29.99 /mh	15	0.01 /sf	3	-		-	-	-	-	0.07 /sf	18
Curing		*/sf*		*146*		*26*							*/sf*	*171*
3390.180 Hardener														
Seal Floors	256.00 sf	0.06 /sf	29.99 /mh	15	0.05 /sf	13	-		-	-	-	-	0.11 /sf	29
Hardener		*/sf*		*15*		*13*							*/sf*	*29*
5510.100 Stairs & Ladders														
Pit Ladder	1.00 ea	20.82 /ea	41.64 /mh	21	75.00 /ea	75	-		-	-	-	-	95.82 /ea	96
Stairs & Ladders		*/ls*		*21*		*75*							*/ls*	*96*
11295.011 Valves- Butterfly MJ														
MJ Btfy Valve 12"	1.00 ea	196.18 /ea	32.70 /mh	196	700.00 /ea	700	-		-	-	-	-	896.18 /ea	896
Mch Btfy Valve 48", Electric Operator	1.00 ea	457.74 /ea	32.70 /mh	458	21,100.00 /ea	21,100	-		-	-	-	-	21,557.74 /ea	21,558
Valves- Butterfly MJ		*/ea*		*654*		*21,800*							*/ea*	*22,454*
11295.020 Valves- Regulating														
Air/Vacuum Valve	1.00 ea	261.57 /ea	32.70 /mh	262	1,800.00 /ea	1,800	-		-	-	-	-	2,061.57 /ea	2,062
Valves- Regulating		*/ls*		*262*		*1,800*							*/ls*	*2,062*
15060.200 Pipe Support														
Pipe Support	5.00 ea	22.00 /ea	22.00 /ea	110	109.41 /ea	547	-		-	-	-	-	131.41 /ea	657
Pipe Support		*/ea*		*110*		*547*							*/ea*	*657*
15230.301 XH Pipe PE														
CS Sch 80 A53 BW PE 12"	10.00 lf	6.37 /lf	40.80 /mh	64	18.34 /lf	183	-		-	-	-	-	24.71 /lf	247
48" Steel Pipe, 300 psi, Mortar Lined & Coated	80.00 lf	24.50 /lf	16.78 /mh	1,960	191.00 /lf	15,280	-		12.00 /lf	960	-	-	227.50 /lf	18,200
Welding per Joint - 48"	6.00 ea	3,612.00 /ea	3,612.00 /ea	21,672	112.50 /ea	675	-		90.00 /ea	540	-	-	3,814.50 /ea	22,887
XH Pipe PE		*/lf*		*23,696*		*16,138*				*1,500*			*/lf*	*41,334*
15230.314 Pipe Fittings														
CS XH 90 Ell LR 12	2.00 ea	321.54 /ea	40.80 /mh	643	908.00 /ea	1,816	-		-	-	-	-	1,229.54 /ea	2,459
48" Pipe Fittings	4.00 ea	750.00 /ea	16.78 /mh	3,000	6,200.00 /ea	24,800	-		155.00 /ea	620	-	-	7,105.00 /ea	28,420
Pipe Fittings		*/ea*		*3,643*		*26,616*				*620*			*/ea*	*30,879*
15230.326 CS XH Coupling														
48" Coupling	3.00 ea	326.40 /ea	40.80 /mh	979	1,200.00 /ea	3,600	-		-	-	-	-	1,526.40 /ea	4,579
CS XH Coupling		*/ea*		*979*		*3,600*							*/ea*	*4,579*
15820.002 Duct Accessories														
Intake Duct	1.00 ea	150.00 /ea	150.00 /ea	150	200.00 /ea	200			-	-	-	-	350.00 /ea	350
Duct Accessories		*/ls*		*150*		*200*							*/ls*	*350*
15830.002 Fans														
Exhaust Fan	1.00 ea	250.00 /ea	250.00 /ea	250	2,500.00 /ea	2,500			-	-	-	-	2,750.00 /ea	2,750
Fans		*/ls*		*250*		*2,500*							*/ls*	*2,750*
16000.001 Electrical Sub														

Spreadsheet Level	Takeoff Quantity	Labor Cost/Unit	Labor Price	Labor Amount	Material Price	Material Amount	Sub Amount	Sub Name	Equip Price	Equip Amount	Other Price	Other Amount	Total Cost/Unit	Total Amount
16000.001 Electrical Sub														
120 Volt	1.00 ls	-	-	-	-	-	***3,500***		-	-	-	-	3,500.00 /ls	3,500
Meter/Disconnect/Wire														
Remote	1.00 ls	-	-	-	-	-	***20,000***		-	-	-	-	20,000.00 /ls	20,000
Telemetry/Antenna/Wiring														
Electrical Sub		*/sf*					*23,500*						*/sf*	*23,500*
817 48" Valve Vault, Station 1011+00				**49,480**		**81,756**	**23,500**			**2,120**				**156,856**
8000 Spanish Fork Provo Reservoir Canal Pipeline Alt 2				***22,905,370***		***37,453,746***	***14,537,585***			***5,948,122***		***539,700***		***81,384,523***

Partial Totals

Labor	22,905,370		514,802.012	hrs
Material	37,453,746			
Subcontract	14,537,585			
Equipment	5,948,122		68,691.588	hrs
Other	539,700			
	81,384,523	81,384,523		
GC's Labor Burden	1,135,968		32.000 %	C
Trade Labor Burden	5,419,532		28.000 %	C
Total w/Labor Burden	**6,555,500**	**87,940,023**		
Material Sales Tax	2,809,031		7.500 %	C
Subcontractor Bond	290,752		2.000 %	C
Equipment Fuel & Maintenance	1,427,549		24.000 %	C
Other Mark-up	37,779		7.000 %	C
Total Construction Value	**4,565,111**	**92,505,134**		
Profit	9,039,091		7.430 %	T
Contingency	18,501,027		20.000 %	T
Total Project w/o Ins/Bonds	**27,540,118**	**120,045,252**		
Builder's Risk Insurance	378,352		0.311 %	T
General Liability Insurance	608,283		0.500 %	T
Performance & Payment Bond	624,790			B
Project Total	**1,611,425**	**121,656,677**		
	Partial Total	***121,656,677***		

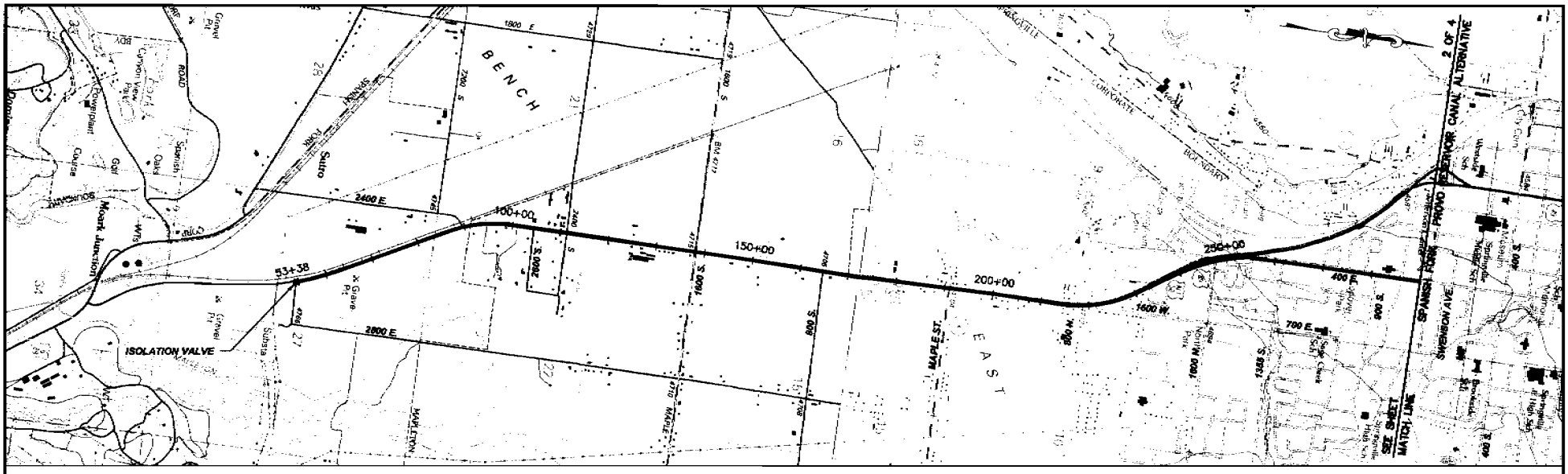

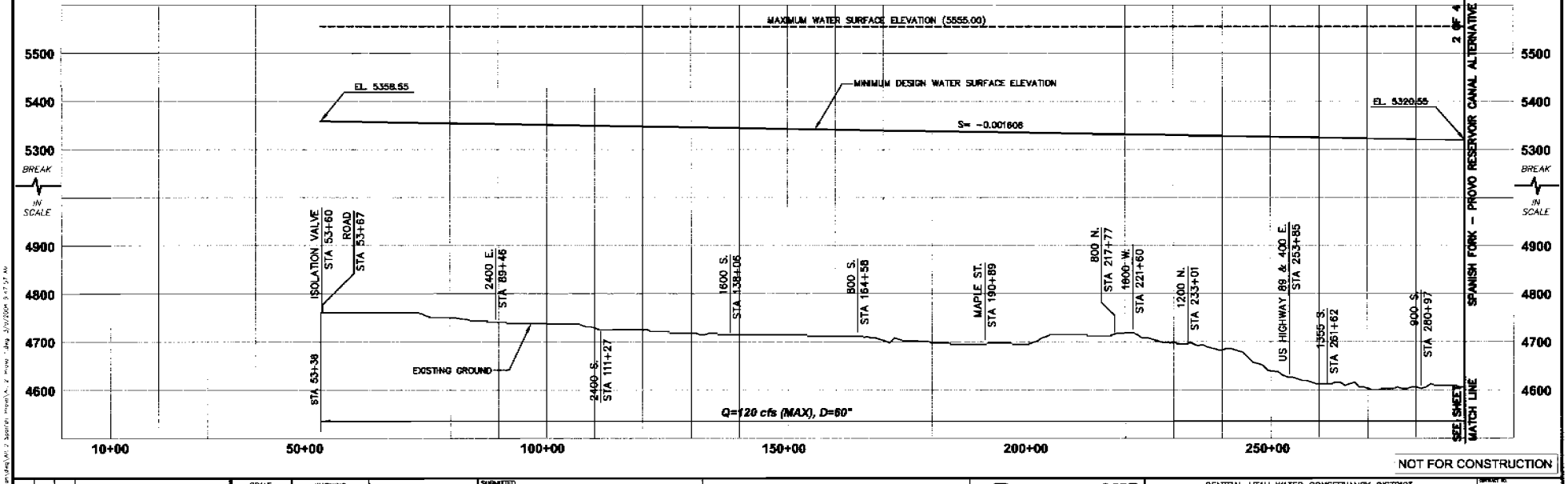

NOT FOR CONSTRUCTION

REV	DATE	BY	DESCRIPTION

SCALE: HORZ. 1" = 1000' VERT. 1" = 100'

WARNING 0 1/2 1 IF THIS BAR DOES NOT MEASURE 1" THEN DRAWING IS NOT TO SCALE.

DESIGNED
DRAWN
CHECKED

SUBMITTED
(PROJECT MANAGER'S NAME) R. C. E. NO. DATE
(COMPANY OFFICER'S NAME) R. C. E. NO. DATE

MWH
MONTGOMERY WATSON HARZA

CUP

CENTRAL UTAH WATER CONSERVANCY DISTRICT
SPANISH FORK - PROVO RESERVOIR CANAL ALTERNATIVE
SPANISH FORK - PROVO RESERVOIR CANAL PIPELINE PLAN AND PROFILE
STA 53+38 TO STA 290+00

SHEET NO. X
DATE FEBRUARY 2004
DRAWING NO. ALT 2-PROVO-1
SHEET NO. of 4

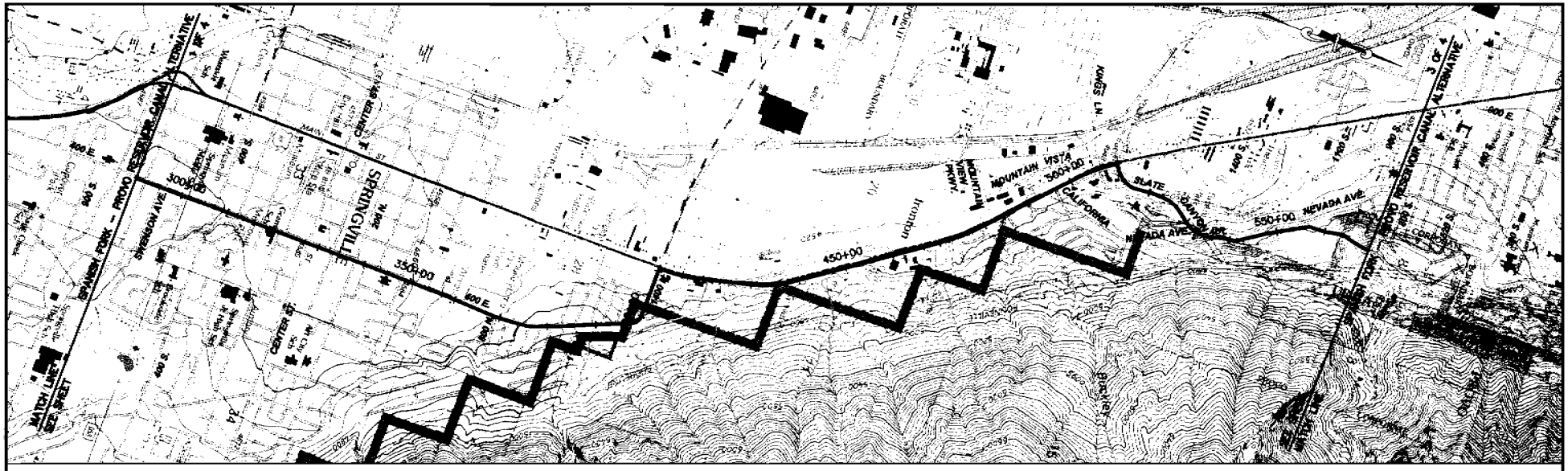

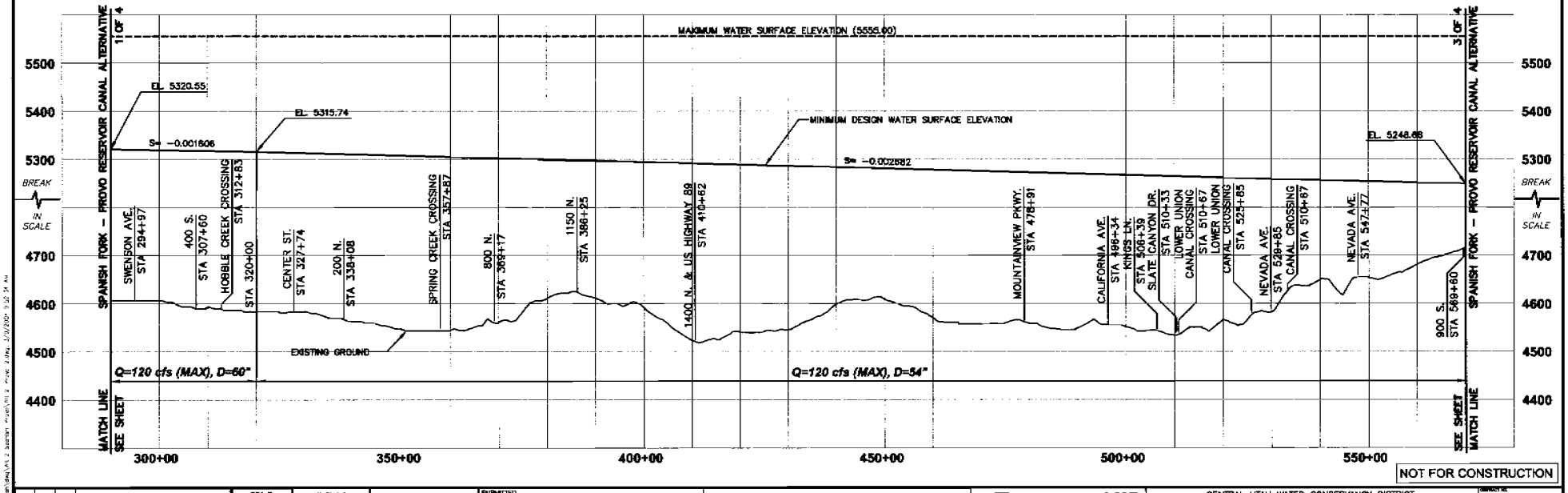

NOT FOR CONSTRUCTION

REV	DATE	BY	DESCRIPTION

SCALE: HORZ: 1" = 1000' VERT. 1" = 100'

WARNING: IF THIS BAR DOES NOT MEASURE 1" THEN DRAWING IS NOT TO SCALE

DESIGNED
DRAWN
CHECKED

SUBMITTED
(PROJECT MANAGER'S NAME) R. C. E. NO. DATE
(COMPANY OFFICER'S NAME) R. C. E. NO. DATE

MWH
MONTGOMERY WATSON HARZA

CUP

CENTRAL UTAH WATER CONSERVANCY DISTRICT

SPANISH FORK – PROVO RESERVOIR CANAL ALTERNATIVE

SPANISH FORK – PROVO RESERVOIR CANAL PIPELINE PLAN AND PROFILE

STA 290+00 TO STA 570+00

CONTRACT NO. X
DATE FEBRUARY 2004
DRAWING NO. ALT 2-PROVO-2
SHEET NO. 2 of 4

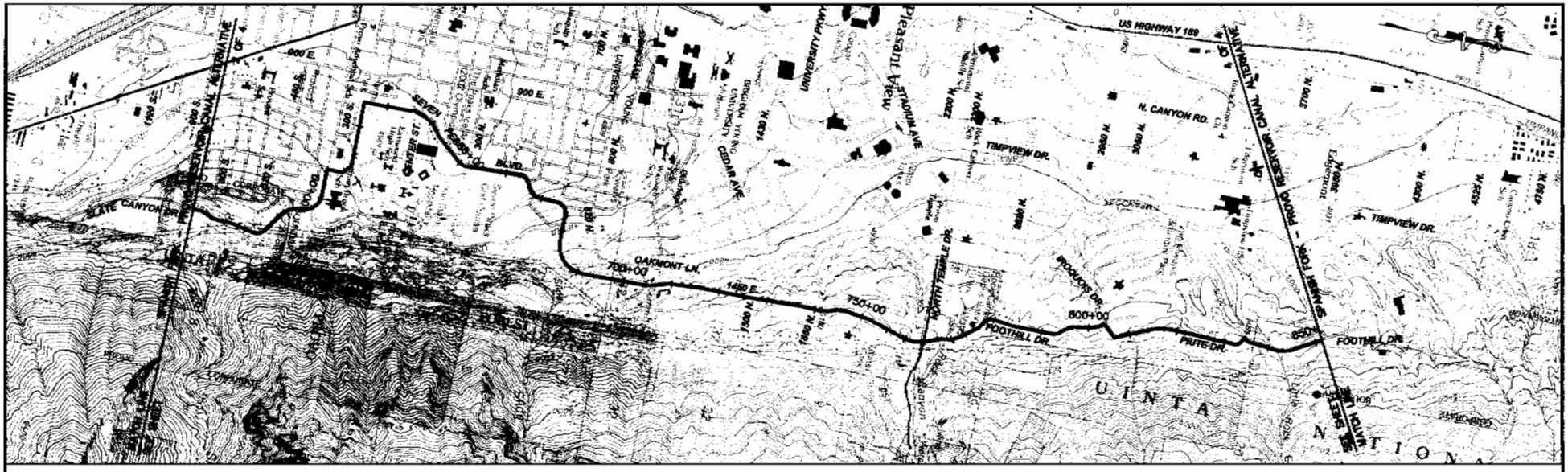

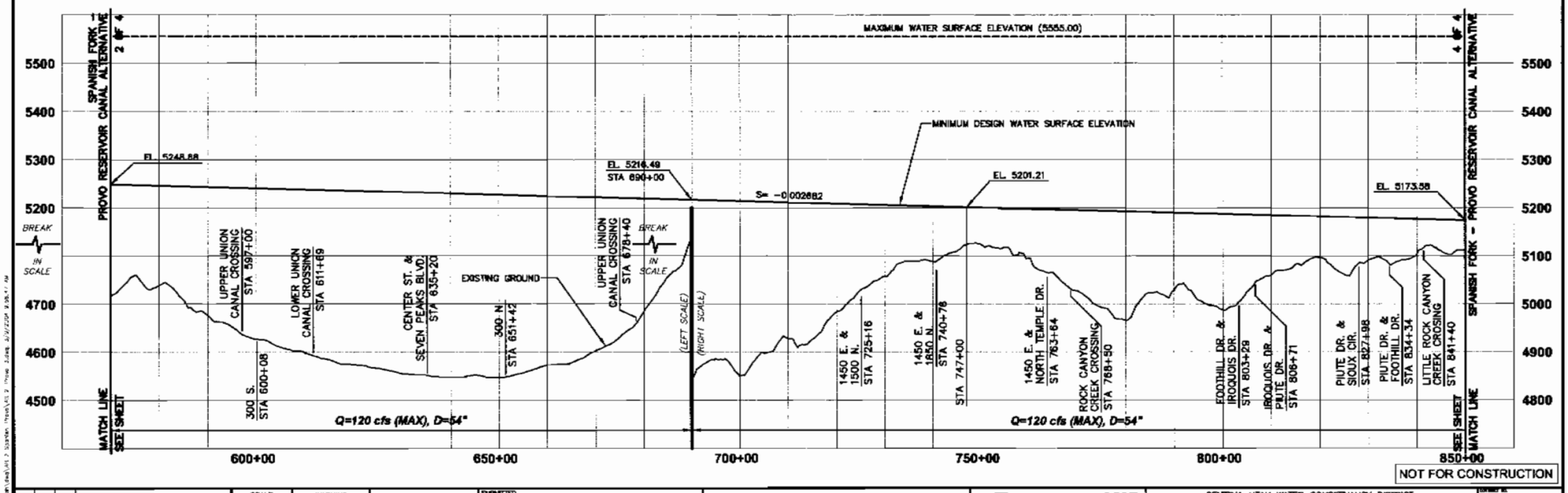

NOT FOR CONSTRUCTION

REV	DATE	BY	DESCRIPTION

SCALE: HORZ: 1" = 1000' VERT. 1" = 100'

WARNING: IF THIS BAR DOES NOT MEASURE 1" THEN DRAWING IS NOT TO SCALE. (D 1/2 1)

DESIGNED
DRAWN
CHECKED

SUBMITTED
(PROJECT MANAGER'S NAME) R. C. E. NO. DATE
(COMPANY OFFICER'S NAME) R. C. E. NO. DATE

MWH
MONTGOMERY WATSON HARZA

CUP

CENTRAL UTAH WATER CONSERVANCY DISTRICT
SPANISH FORK – PROVO RESERVOIR CANAL ALTERNATIVE
SPANISH FORK – PROVO RESERVOIR CANAL PIPELINE PLAN AND PROFILE
STA 570+00 TO STA 850+00

CONTRACT NO. X
DATE FEBRUARY 2004
DRAWING NO. ALT 2-PROVO-3
SHEET NO. 3 of 4

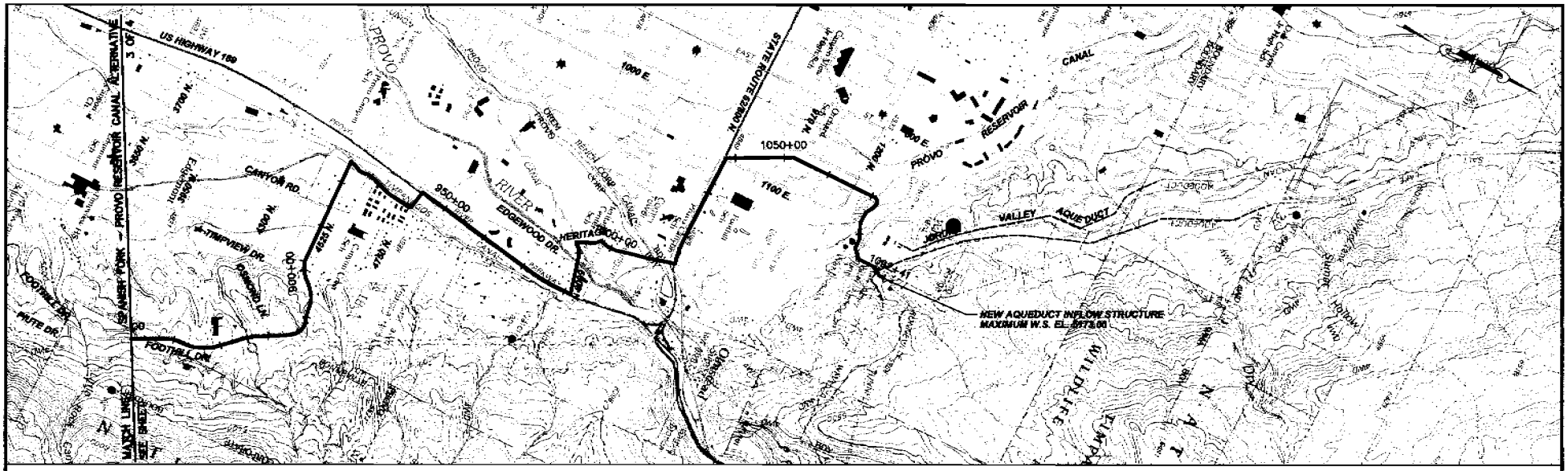

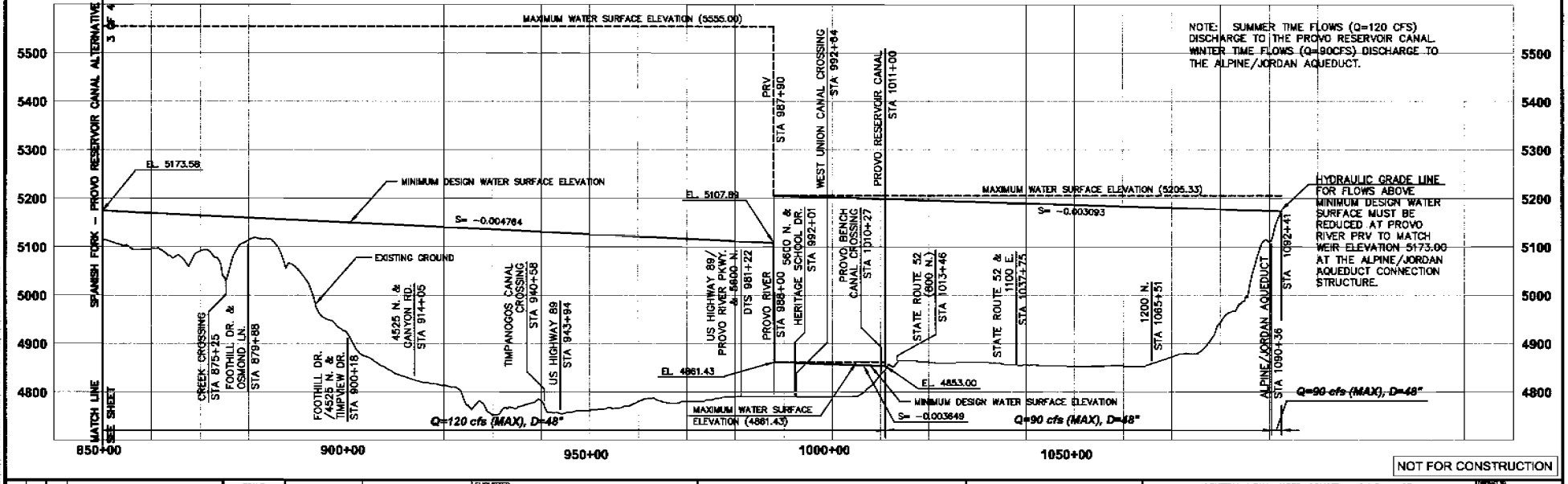

NOT FOR CONSTRUCTION

REV	DATE	BY	DESCRIPTION

SCALE: HORZ: 1" = 1000' VERT. 1" = 100'

WARNING: 0 1/2 IF THIS BAR DOES NOT MEASURE 1" THEN DRAWING IS NOT TO SCALE.

DESIGNED
DRAWN
CHECKED

SUBMITTED
(PROJECT MANAGER'S NAME) R. C. E. NO. DATE
(COMPANY OFFICER'S NAME) R. C. E. NO. DATE

MWH
MONTGOMERY WATSON HARZA

CUP

CENTRAL UTAH WATER CONSERVANCY DISTRICT
SPANISH FORK - PROVO RESERVOIR CANAL ALTERNATIVE
SPANISH FORK - PROVO RESERVOIR CANAL PIPELINE PLAN AND PROFILE
STA 850+00 TO STA 1092+41

CONTRACT NO. X
DATE FEBRUARY 2004
DRAWING NO. ALT 2-PROVO-4
SHEET NO. 4 of 4

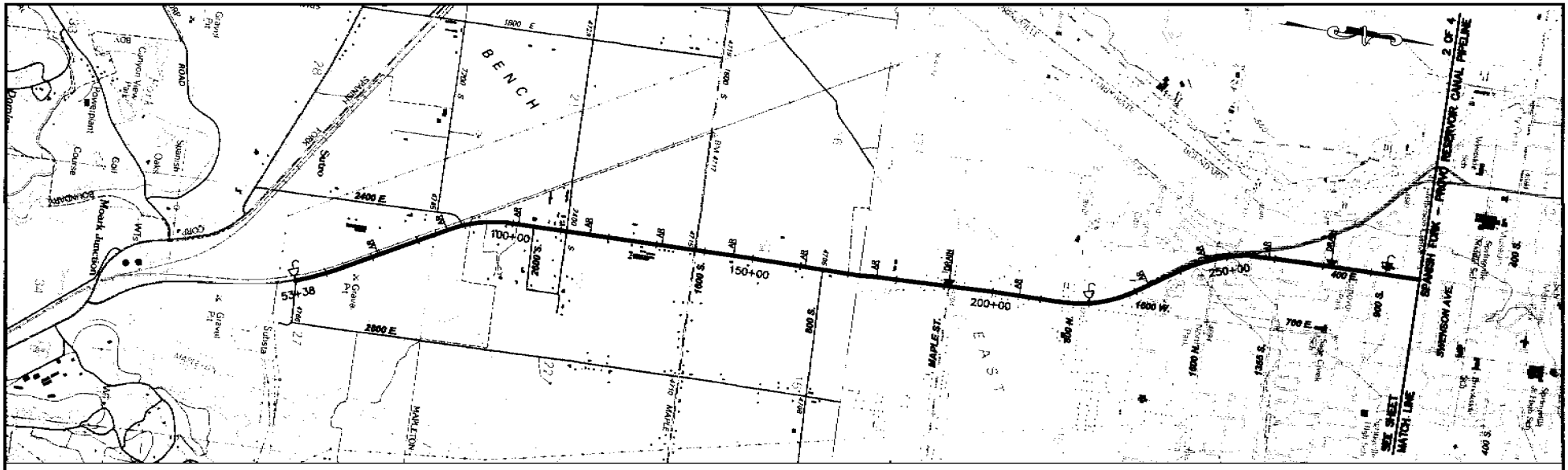

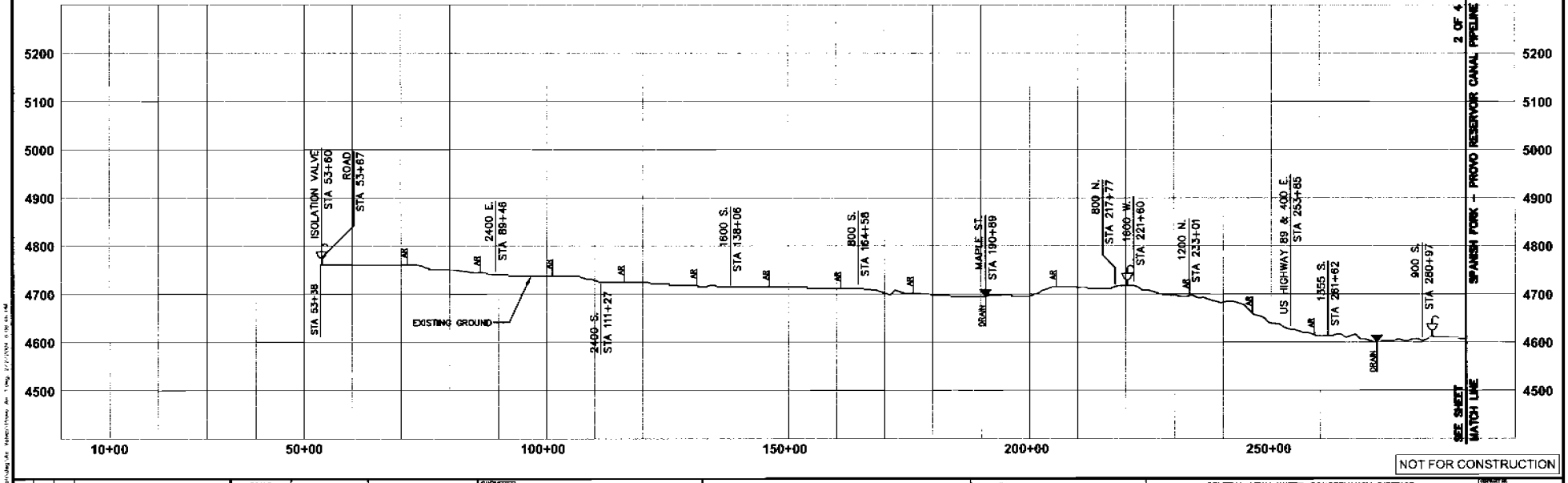

NOT FOR CONSTRUCTION

REV	DATE	BY	DESCRIPTION

SCALE: HORZ: 1" = 1000' VERT. 1" = 100'

WARNING 0 1/2 1 IF THIS BAR DOES NOT MEASURE 1" THEN DRAWING IS NOT TO SCALE.

DESIGNED
DRAWN
CHECKED

SUBMITTED
(PROJECT MANAGER'S NAME) R. C. E. NO. DATE
(COMPANY OFFICER'S NAME) R. C. E. NO. DATE

MWH
MONTGOMERY WATSON HARZA

CUP

CENTRAL UTAH WATER CONSERVANCY DISTRICT
AIR RELEASE, VACUUM, and DRAIN VALVES FOR ULS PIPELINES – ALTERNATIVES 1,2,3
SPANISH FORK – PROVO RESERVOIR CANAL PIPELINE
STA 53+38 TO STA 290+00

DRAWING NO. X
DATE JANUARY 2004
JOB NO. P-PROVO-AIR-1
SHEET NO. 1 of 4

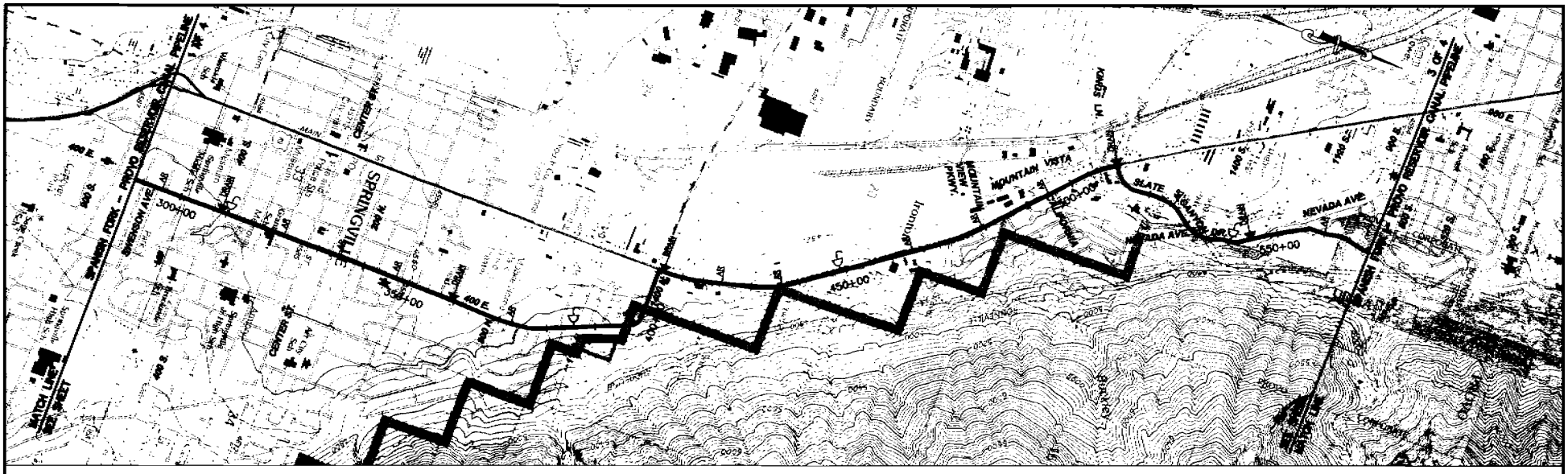

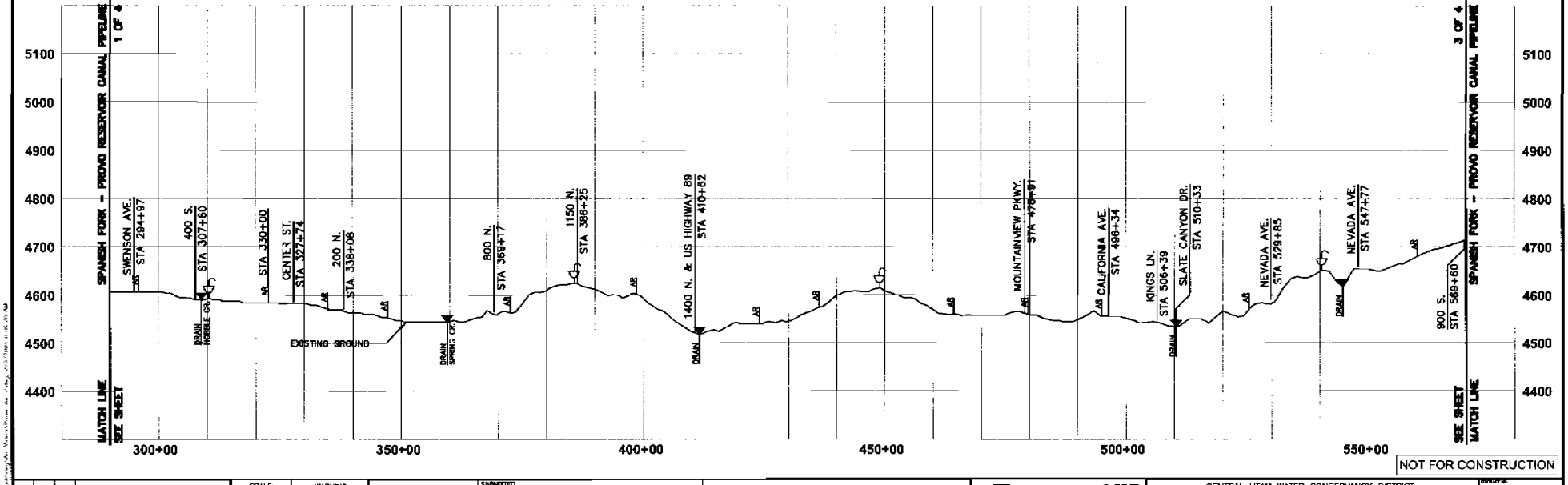

NOT FOR CONSTRUCTION

REV	DATE	BY	DESCRIPTION

SCALE: HORZ: 1" = 1000' VERT. 1" = 100'

WARNING 0 1/2 1 IF THIS BAR DOES NOT MEASURE 1/2 THEN DRAWING IS NOT TO SCALE.

DESIGNED
DRAWN
CHECKED

SUBMITTED
(PROJECT MANAGER'S NAME) R. C. E. NO. DATE
(COMPANY OFFICER'S NAME) R. C. E. NO. DATE

MWH
MONTGOMERY WATSON HARZA

CUP

CENTRAL UTAH WATER CONSERVANCY DISTRICT
AIR RELEASE, VACUUM, and DRAIN VALVES FOR U/S PIPELINES – ALTERNATIVES 1,2,3
SPANISH FORK – PROVO RESERVOIR CANAL PIPELINE
STA 290+00 TO STA 570+00

CONTRACT NO. K
DATE JANUARY 2004
DRAWING NO. PROVO-AIR-2
SHEET NO. 2 of 4

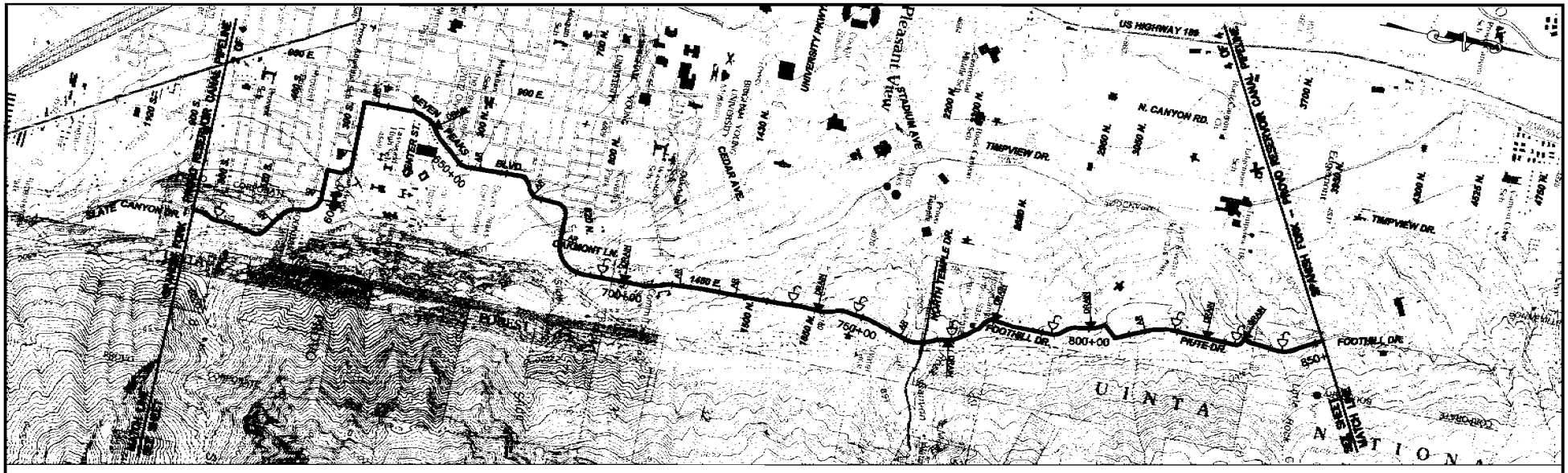

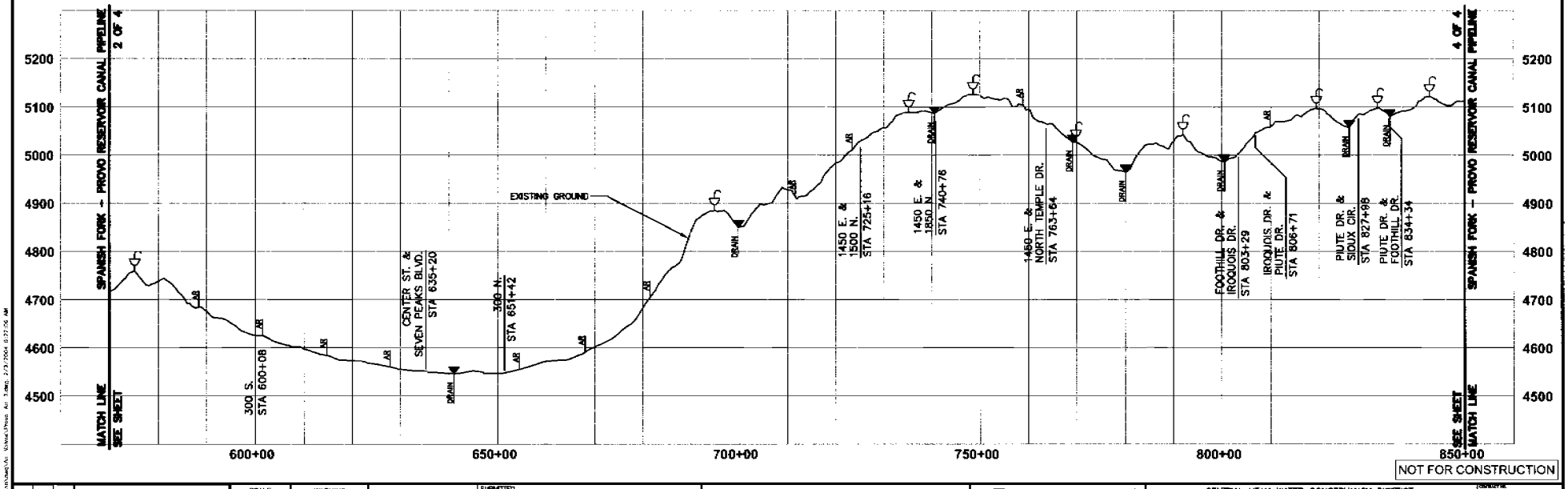

NOT FOR CONSTRUCTION

REV	DATE	BY	DESCRIPTION

SCALE: HORZ: 1" = 1000' VERT. 1" = 100'

WARNING 0 1/2 1 IF THIS BAR DOES NOT MEASURE 1" THEN DRAWING IS NOT TO SCALE.

DESIGNED
DRAWN
CHECKED

SUBMITTED
(PROJECT MANAGER'S NAME) R. C. E. NO. DATE
(COMPANY OFFICER'S NAME) R. C. E. NO. DATE

MWH
MONTGOMERY WATSON HARZA

CUP

CENTRAL UTAH WATER CONSERVANCY DISTRICT
AIR RELEASE, VACUUM, and DRAIN VALVES FOR ULS PIPELINES – ALTERNATIVES 1,2,3
SPANISH FORK – PROVO RESERVOIR CANAL PIPELINE
STA 570+00 TO STA 850+00

CONTRACT NO. K
DATE JANUARY 2004
DRAWING NO. PROVO-AIR-3
SHEET NO. 3 of 4

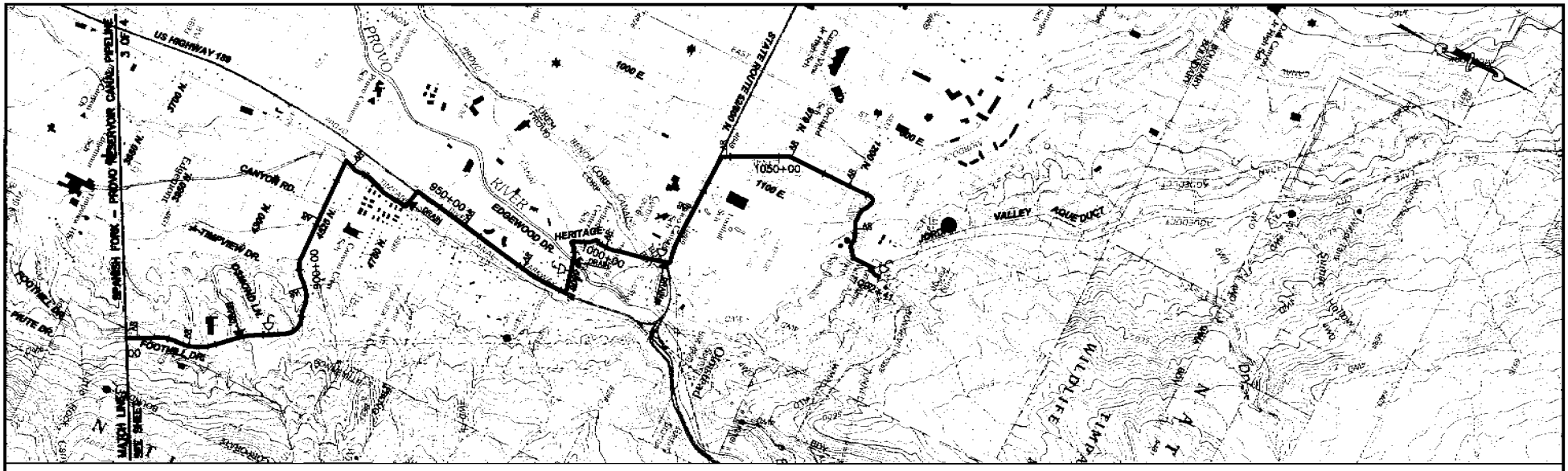

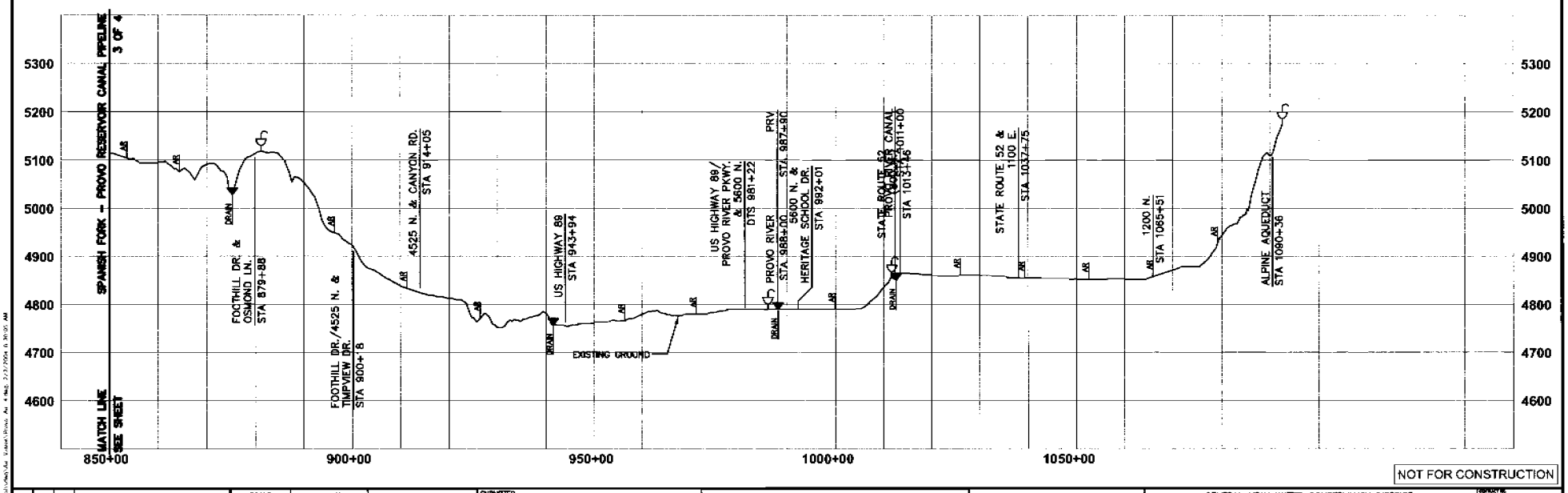

NOT FOR CONSTRUCTION

REV	DATE	BY	DESCRIPTION

SCALE: HOR2: 1" = 1000' VERT. 1" = 100'

WARNING 0 1/2 1 IF THIS BAR DOES NOT MEASURE 1" THEN DRAWING IS NOT TO SCALE.

DESIGNED
DRAWN
CHECKED

SUBMITTED
(PROJECT MANAGER'S NAME) R. C. E. NO. DATE
(COMPANY OFFICER'S NAME) R. C. E. NO. DATE

MWH
MONTGOMERY WATSON HARZA

CENTRAL UTAH WATER CONSERVANCY DISTRICT
AIR RELEASE, VACUUM, and DRAIN VALVES FOR ULS PIPELINES – ALTERNATIVES 1,2,3
SPANISH FORK – PROVO RESERVOIR CANAL PIPELINE
STA 850+00 TO STA 1092+41

DRAWING NO. X
DATE JANUARY 2004
PROVO-AIR-4
SHEET NO. 4 of 4

TABLE VIII-9

Provo Reservoir Canal Pipeline

Station	Air Vacuum Valve		Air Release Valves		Blow-Off Drain Valves	
	Valve Size	Pressure Class	Valve Size	Pressure Class	*Valve Size	Pressure Class
53+38	10	350	2	350		
71+00			2	350		
86+00			2	350		
101+00			2	350		
115+00			2	400		
130+00			2	400		
146+00			2	400		
160+00			2	400		
175+00			2	400		
191+00					4	400
206+00			2	400		
220+00	10	400	2	400		
233+00			2	400		
246+00			2	400		
259+00			2	400		
271+00					4	400
284+00	10	400	2	400		
296+00			2	400		
310+00					4	450
311+00	10	450	2	450		
323+00			2	450		
335+00			2	450		
347+00			2	450		
360+00					4*	450
373+00			2	450		
385+00	10	400	2	400		
399+00			2	450		
411+00					4*	450
423+00			2	450		
435+00			2	450		
448+00	10	450	2	450		
463+50			2	450		
479+00			2	450		
494+50			2	450		
510+00					4	450
525+00			2	450		
540+00	10	400	2	400		

TABLE VIII-9

Provo Reservoir Canal Pipeline

Station	Air Vacuum Valve		Air Release Valves		Blow-Off Drain Valves	
	Valve Size	Pressure Class	Valve Size	Pressure Class	*Valve Size	Pressure Class
545+00					4	400
560+00			2	400		
575+00	10	350	2	350		
588+00			2	400		
601+00			2	400		
614+00			2	450		
627+00			2	450		
641+00					4*	450
659+00			2	450		
668+00			2	450		
681+00			2	400		
695+00	10	400	2	400		
700+00					4*	300
711+00			2	300		
723+00			2	250		
735+00	10	200	2	200		
740+00					4	200
749+00	10	200	2	200		
759+00			2	200		
768+00					4	250
769+00	10	250	2	250		
780+00					4*	250
792+00	10	250	2	250		
800+00					4*	250
810+00			2	250		
819+00	10	200	2	200		
825+00					4	250
832+00	10	200	2	200		
834+00					4	200
843+00	10	200	2	200		
853+00			2	200		
864+00			2	200		
875+00					4*	250
881+00	10	200	2	200		
896+00			2	300		
911+00			2	350		
925+00			2	350		

TABLE VIII-9

Provo Reservoir Canal Pipeline

Station	Air Vacuum Valve		Air Release Valves		Blow-Off Drain Valves	
	Valve Size	Pressure Class	Valve Size	Pressure Class	*Valve Size	Pressure Class
941+00					4	350
957+00			2	350		
971+00			2	350		
986+00	10	350	2	350		
988+00					*8	350
1000+00			2	350		
1011+00	10	300	2	300		
1012+00					6	300
1024+50			2	300		
1037+80			2	300		
1051+10			2	300		
1064+50			2	300		
1079+00			2	300		
1091+05	8	150				

*Throttling Valve rated to control flow to 3 to 5 cfs max. will require energy dissipator at stream discharge.

(Alternative 2) Crossing Tables for ULS

Table 8 - 5 Highway and Interstate Pipeline Crossings			
Feature Name	**Approximate Pipeline Station**	**Highway or Interstate**	**Crossing Technique**
Spanish Fork – Santaquin Pipeline	13+21	US Highway 89	Jack/bore
Spanish Fork – Santaquin Pipeline	38+00	U.S. Highway 6	Jack/bore
Spanish Fork – Santaquin Pipeline	710+00	U.S. Highway 6/State Route 198	Jack/bore
Spanish Fork – Santaquin Pipeline	742+00	Interstate 15	Jack/bore
Spanish Fork – Santaquin Pipeline	882+00	U.S. Highway 6	Jack/bore
Spanish Fork – Provo Reservoir Canal Pipeline	945+00	U.S. Highway 189	Jack/bore
Spanish Fork – Provo Reservoir Canal Pipeline	1014+00	State Route 52	Jack/bore

Table 8-6 Railroad Crossings		
Pipeline	**Approximate Pipeline Station**	**Crossing Technique**
Spanish Fork – Santaquin Pipeline	14+00	Jack/bore
Spanish Fork – Santaquin Pipeline	38+00	Jack/bore
Spanish Fork – Santaquin Pipeline	938+00	Jack/bore
Spanish Fork Canyon Pipeline	392+00	Jack/bore

Table 8-7 Stream, River and Canal Pipeline Crossings			
Pipeline Name	**Approximate Pipeline Station**	**Water Feature**	**Crossing Technique**
Spanish Fork Canyon Pipeline	131+50	Creek	Jack/bore
Spanish Fork Canyon Pipeline	139+10	Creek	Jack/bore
Spanish Fork Canyon Pipeline	164+40	Creek	Jack/bore
Spanish Fork Canyon Pipeline	188+50	Creek	Jack/bore
Spanish Fork Canyon Pipeline	206+00	Creek	Jack/bore
Spanish Fork Canyon Pipeline	223+00	Creek	Jack/bore
Spanish Fork Canyon Pipeline	265+00	Creek	Jack/bore

(Alternative 2) Crossing Tables for ULS

Table 8-7
Stream, River and Canal Pipeline Crossings

Pipeline Name	Approximate Pipeline Station	Water Feature	Crossing Technique
Spanish Fork Canyon Pipeline	283+75	Creek	Jack/bore
Spanish Fork Canyon Pipeline	306+70	Creek	Jack/bore
Spanish Fork Canyon Pipeline	325+50	Creek	Jack/bore
Spanish Fork Canyon Pipeline	365+50	Creek	Jack/bore
Spanish Fork Canyon Pipeline	383+97	Creek	Jack/bore
Spanish Fork Canyon Pipeline	422+00	Mapleton Lateral Canal	
Spanish Fork – Santaquin Pipeline	98+00	Mill Race Canal	Jack/bore or Micro-tunnel
Spanish Fork – Santaquin Pipeline	100+00	Spanish Fork River	Jack/bore or Micro-tunnel
Spanish Fork – Santaquin Pipeline	103+00	South Field Canal	Jack/bore
Spanish Fork – Santaquin Pipeline	143+00	Salem Canal	Jack/bore
Spanish Fork – Santaquin Pipeline	242+00	Salem Canal	Jack/bore
Spanish Fork – Santaquin Pipeline	501+00	Strawberry Highline Canal	Jack/bore
Spanish Fork – Santaquin Pipeline	516+00	Strawberry Highline Canal	Jack/bore
Spanish Fork – Santaquin Pipeline	578+00	Irrigation Canal	open cut
Spanish Fork – Santaquin Pipeline	592+00	Irrigation Canal	open cut
Spanish Fork – Santaquin Pipeline	627+00	Irrigation Canal	open cut
Spanish Fork – Santaquin Pipeline	630+00	Strawberry Highline Canal	Jack/bore
Spanish Fork – Santaquin Pipeline	686+00	Irrigation Canal	open cut
Spanish Fork – Santaquin Pipeline	691+00	Spring Creek	Jack/bore
Spanish Fork – Santaquin Pipeline	800+00	Strawberry Highline Canal	Jack/bore
Spanish Fork – Santaquin Pipeline	880+00	drainage channel	open cut
Santaquin – Mona Reservoir Pipeline	344+00	Inlet to Mona Reservoir	Jack/bore
Spanish Fork – Provo Reservoir Canal/Pipeline	313+00	Hobble Creek	Jack/bore
Spanish Fork – Provo Reservoir Canal/Pipeline	357+00	Spring Creek	Jack/bore
Spanish Fork – Provo Reservoir Canal/Pipeline	678+00	Upper Union Canal	Open cut
Spanish Fork – Provo Reservoir	768+00	Rock Canyon	Open cut

Table 8-7
Stream, River and Canal Pipeline Crossings

Pipeline Name	Approximate Pipeline Station	Water Feature	Crossing Technique
Canal/Pipeline			
Spanish Fork – Provo Reservoir Canal/Pipeline	941+00	Timpanogos Canal	Jack/bore
Spanish Fork – Provo Reservoir Canal/Pipeline	987+00	Provo River	Micro-tunnel
Spanish Fork – Provo Reservoir Canal/Pipeline	1003+00	Union Canal	Jack/bore
Spanish Fork – Provo Reservoir Canal/Pipeline	1010+00	Bench Canal	Jack/bore
Spanish Fork – Provo Reservoir Canal/Pipeline	1013+00	Provo Reservoir Canal	Jack/bore

TABLE VIII-12
Discharge and Drain Locations for Provo Reservoir Canal

Station	Drain Size (inch)	Disturbance area			Length of Road Cut (ft)	Discharge Feature			Discharge (cfs)	Remarks
		Width (ft)	Length (ft)	Area (sf)		Natural Drainage	Storm Drain	Pumped to Surface		
Provo Reservoir Canal										
190+89	4	50	20	1000			x		2.0 to 4.0	Concrete lined ditch
271+00	4			0	25		x		1.0 to 2.0	
308+00	4			NA		x			1.0 to 2.0	Hobble Creek-discharge thru wingwall
360+00	4			0	25		x		2.0 to 4.0	Spring Creek
411+00	4			0	50		x		1.0 to 2.0	
510+00	4			0	50		x		2.5 to 5.0	
545+00	4			0	25		x		1.0 to 1.5	
641+00	4			0	30		x		2.0 to 4.0	
700+00	4			0	25		x		1.0 to 2.0	
741+00	4			0	30			x	0.5 to 1.0	Discharge to curb and gutter
768+00	4	50	25	1250		x			1.0 to 2.5	Discharge to Rock Canyon
780+00	4			0	30		x		2.0 to 4.0	
800+00	4			0	25			x	1.0 to 2.0	Discharge to curb and gutter
824+00	4			0	25			x	0.5 to 1.5	Discharge to curb and gutter
833+00	4			0	15		x		0.5 to 1.5	
875+00	4			0	25		x		1.0 to 2.5	
942+00	4			0			x		2.5 to 5.0	
987+00	8	50	50	2500		x			5.0 to 30.0	Discharge to Provo River
1011+00	6	50	100	5000					5.0 to 15.0	Discharge to Provo Reservoir Canal

P:\MWH\Central Utah\dwg\Tech Memo 3-B\Sheets\Figures\Fig-3-B-4.dwg, 1/21/2004 3:22:36 PM

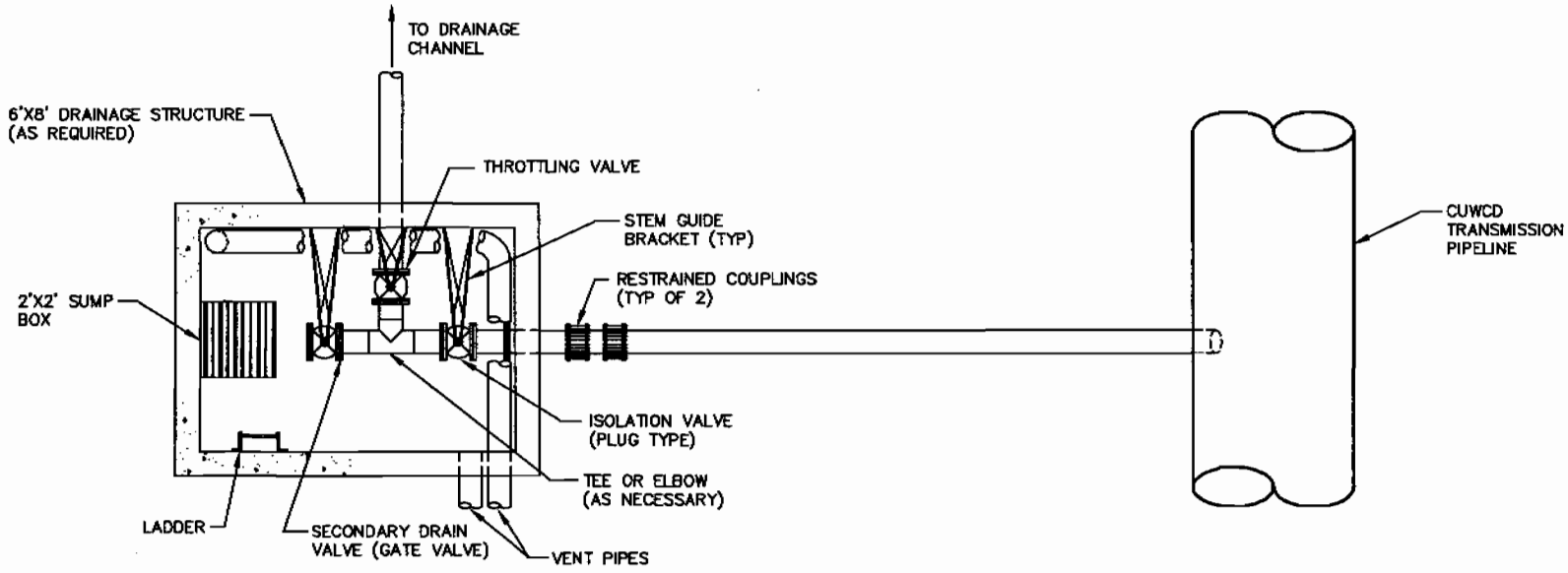

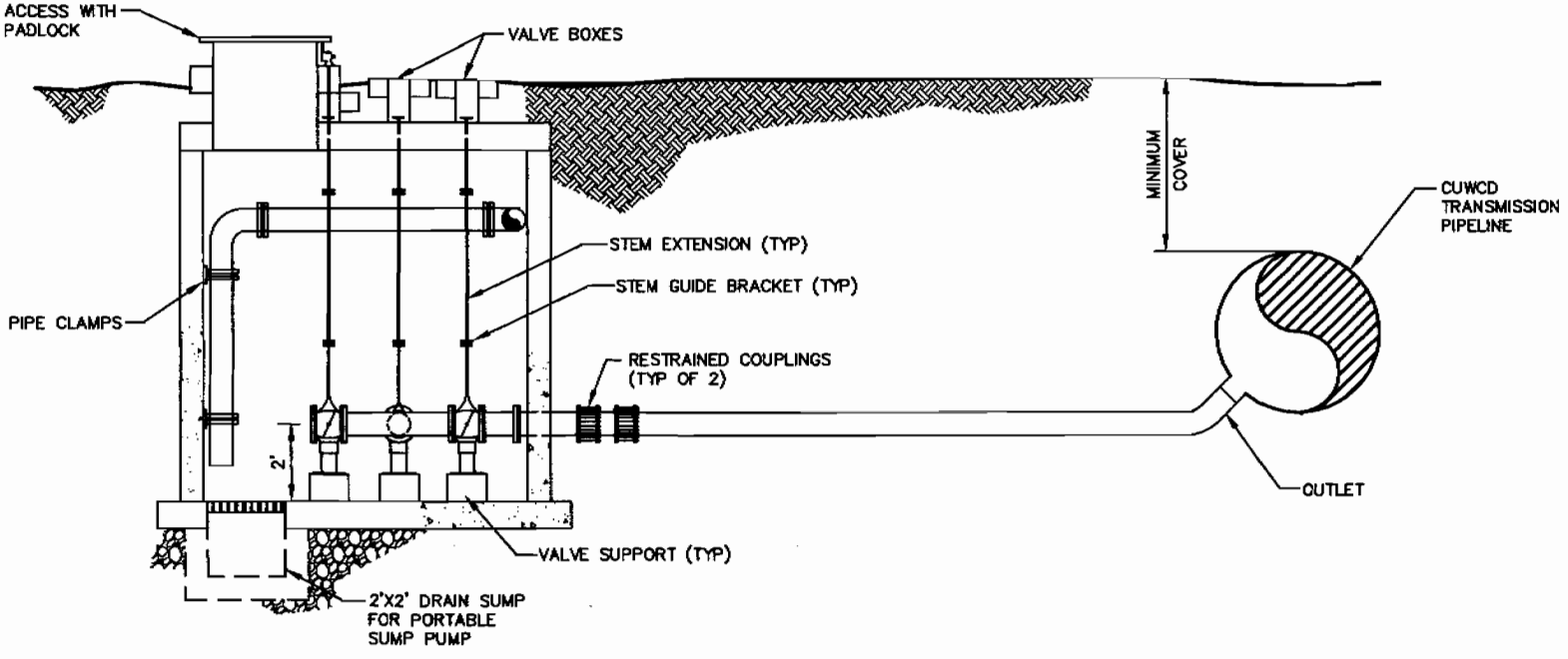

SCALE: N/A

MWH
MONTGOMERY WATSON HARZA

CUP

CENTRAL UTAH WATER CONSERVANCY DISTRICT

TYPICAL DETAIL

BLOW-OFF DRAIN

FIGURE III-B-4

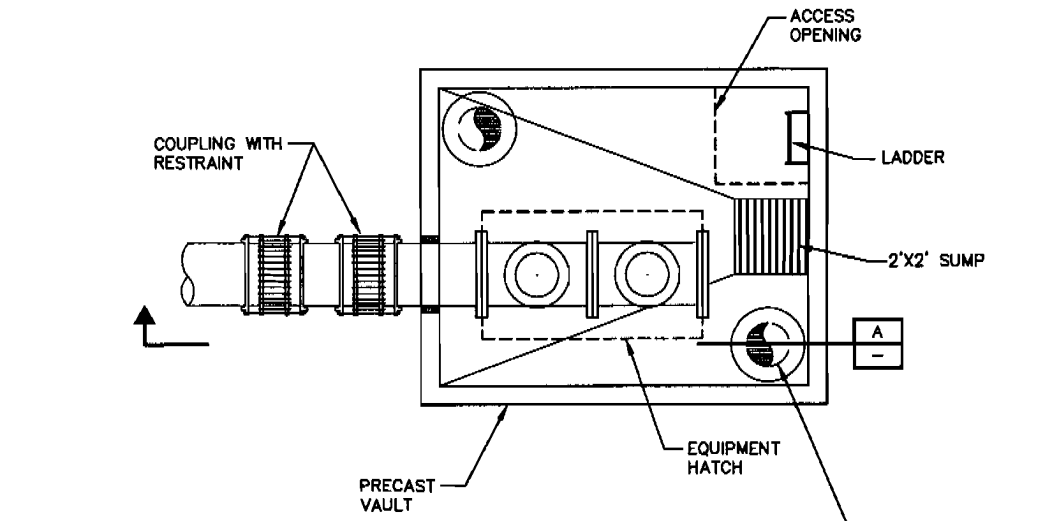

PLAN

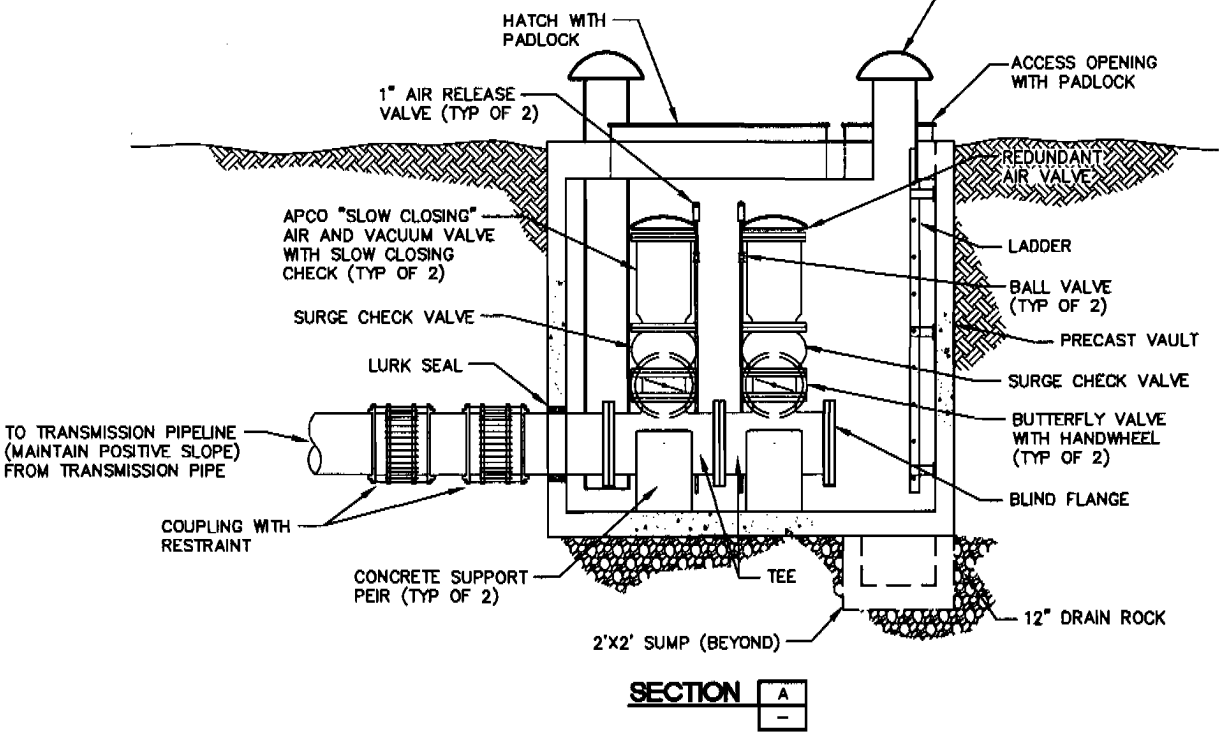

SECTION A

AIR VACUUM/AIR RELEASE VAULT

(6" TO 12" VALVES)

SCALE: N/A	MWH MONTGOMERY WATSON HARZA	CUP	CENTRAL UTAH WATER CONSERVANCY DISTRICT TYPICAL DETAIL AIR VACUUM/AIR RELEASE VAULT FIGURE III-B-5

P:\MWH-Central Utah\dwg\Tech Memo 3-B\Sheets\Figures\Fig-3-B-5.dwg, 1/27/2004 8:41:15 PM

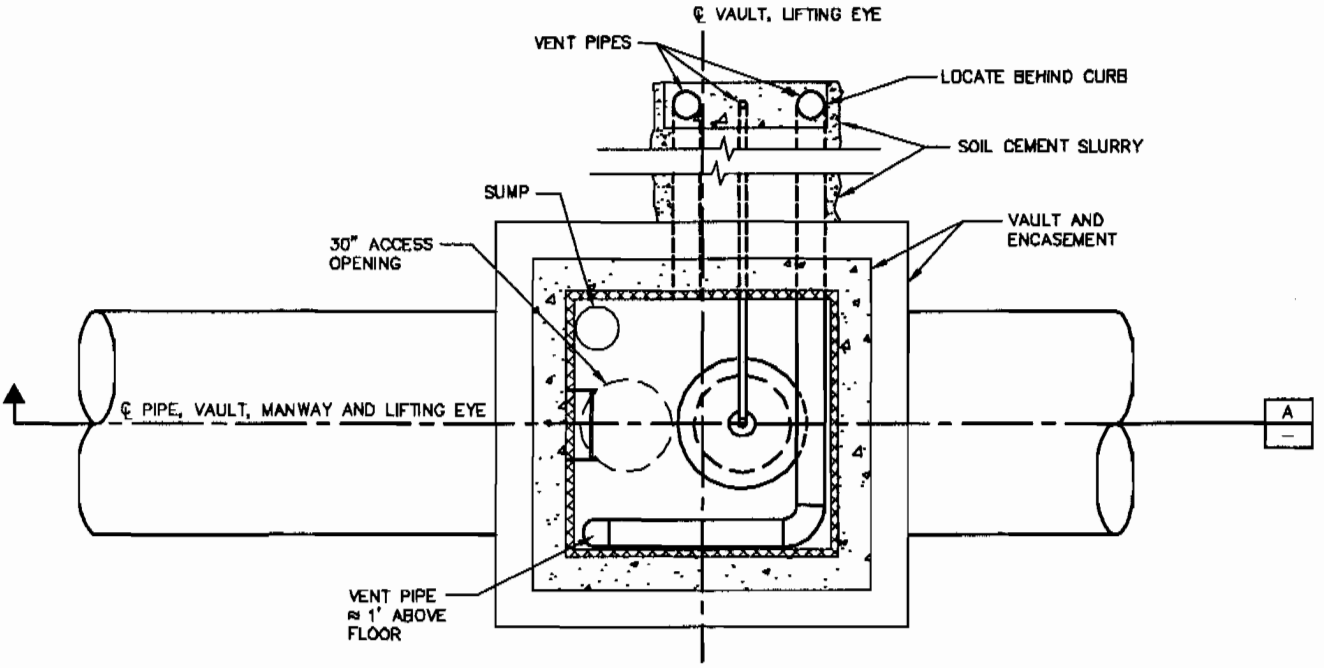

PLAN

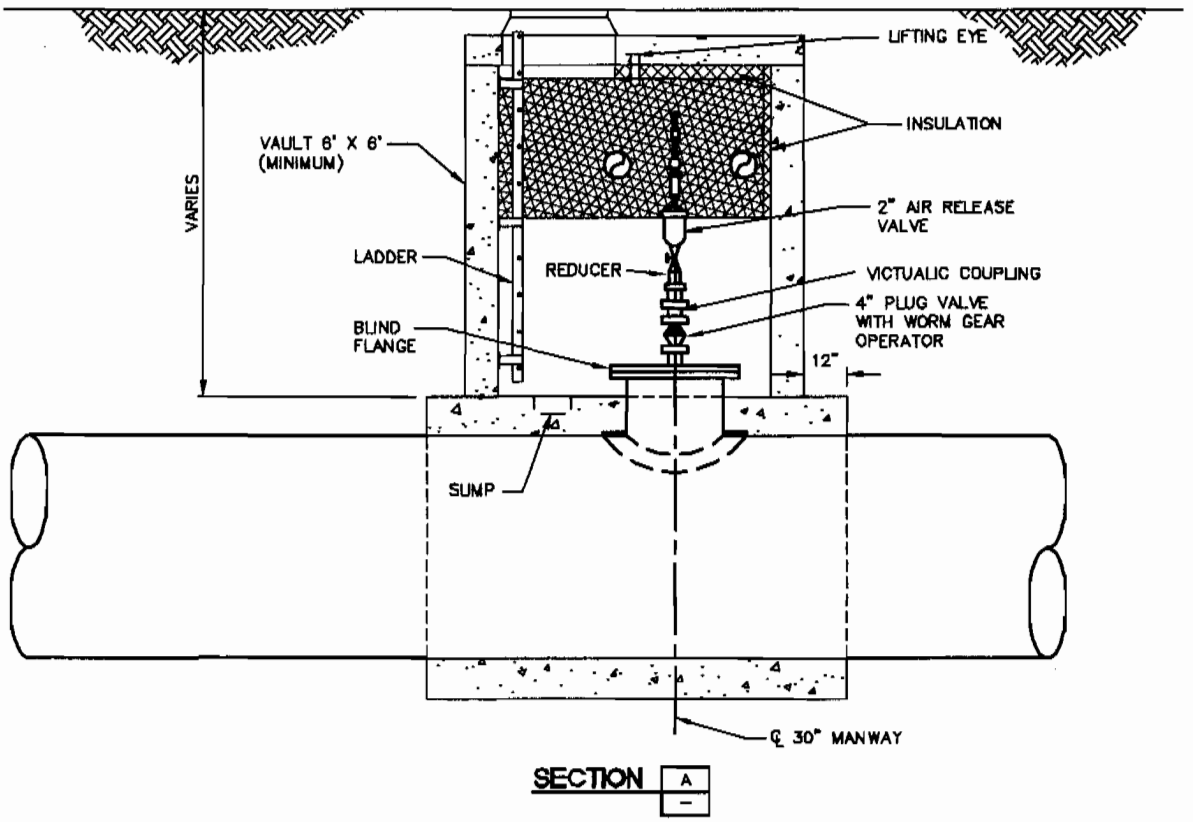

SECTION A

AIR RELEASE VAULT

SCALE:			
N/A	MWH MONTGOMERY WATSON HARZA	CUP	CENTRAL UTAH WATER CONSERVANCY DISTRICT TYPICAL DETAIL AIR RELEASE VAULT FIGURE III-B-6

P:\MWH\Central Utah\dwg\Figures\Fig-3-B-6.dwg, 11/20/2003 11:51:38 AM

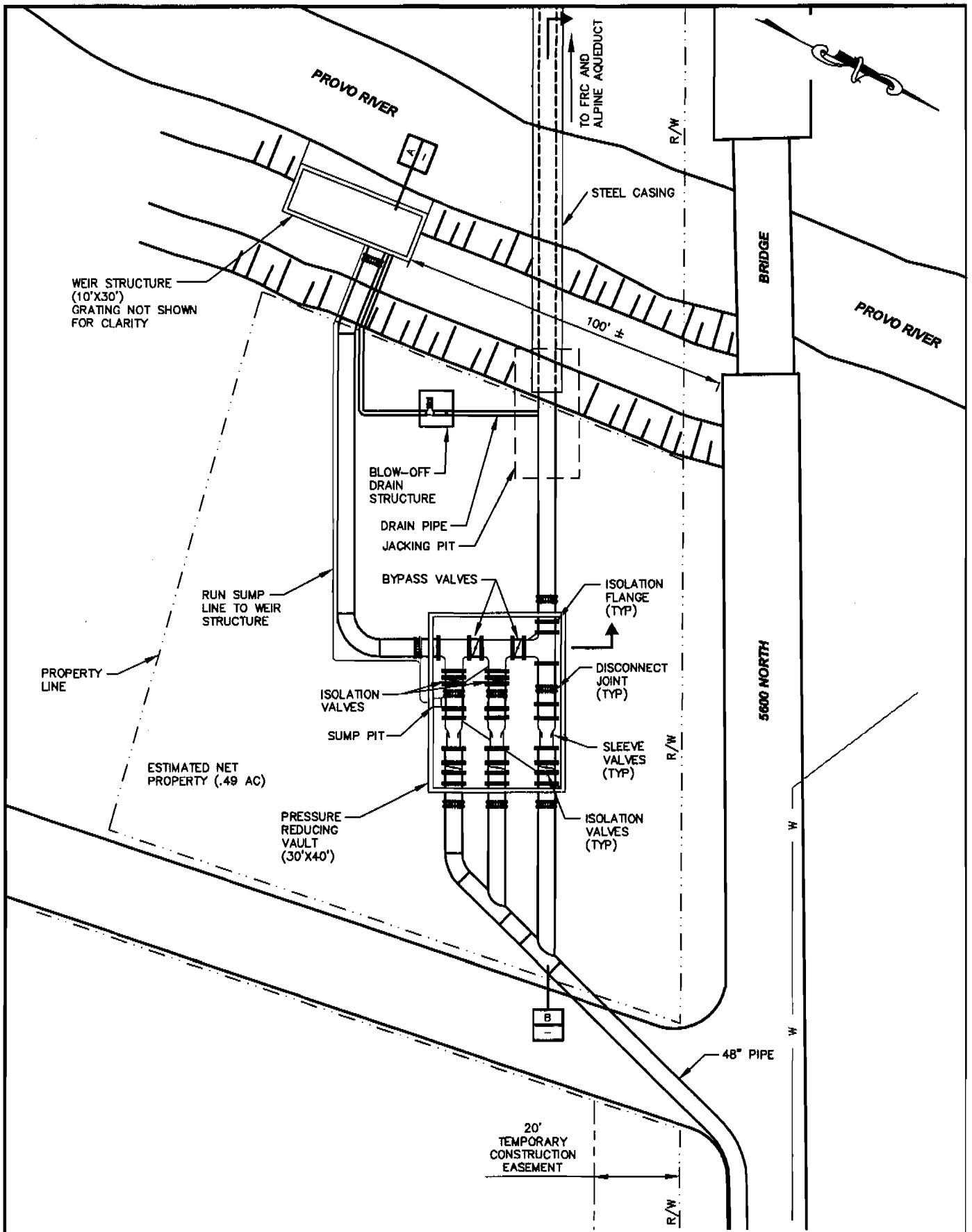

SCALE: N/A

MWH
MONTGOMERY WATSON HARZA

CUP COMPLETION

CENTRAL UTAH WATER CONSERVANCY DISTRICT

SPANISH FORK – PROVO RESERVOIR CANAL PIPELINE

PROVO RIVER DISCHARGE STRUCTURE – PLAN

FIGURE III-B-9

P:\MWH\Central Utah\Dwg\Tech Memo 3-B\Sheets\Figures\Fig-3-B-9.dwg, 3/3/2004 2:08:41 PM

P:\MWH\Central Utah\dwg\Tech Memo 3-B\Sheets\Figures\Fig-3-B-10.dwg, 3/3/2004 2:07:53 PM

SCALE: N/A

MWH
MONTGOMERY WATSON HARZA

CUP

CENTRAL UTAH WATER CONSERVANCY DISTRICT

DETAIL

PROVO RIVER DISCHARGE STRUCTURE - SECTIONS

FIGURE III-B-10

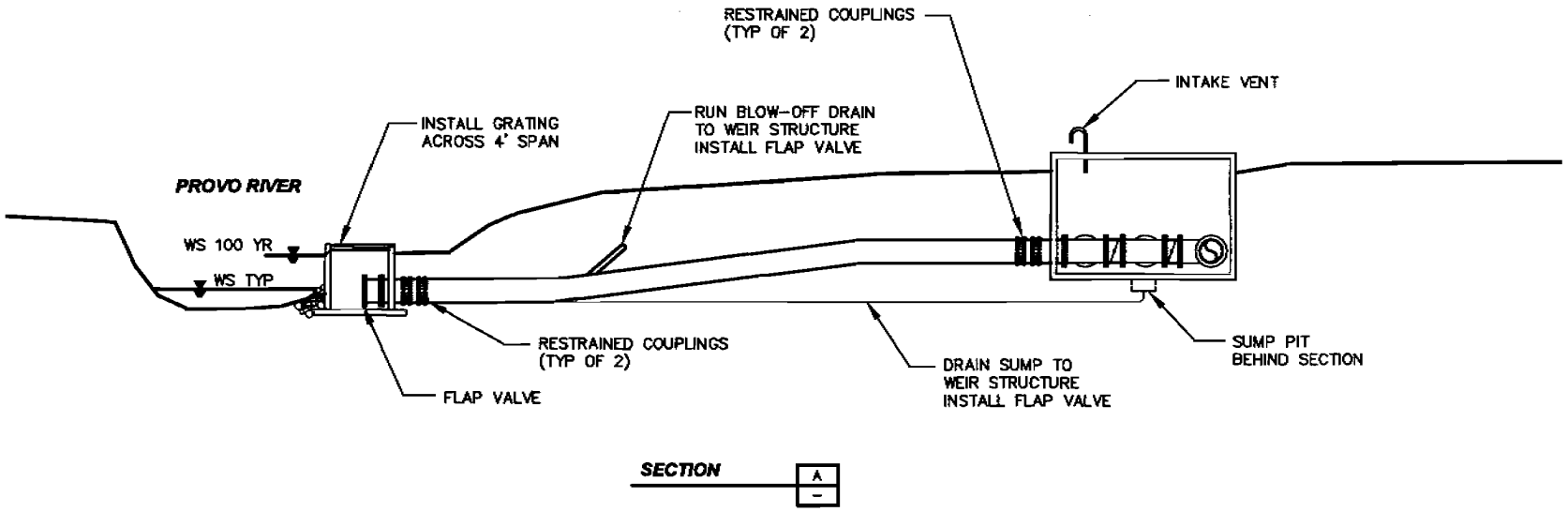

SECTION A

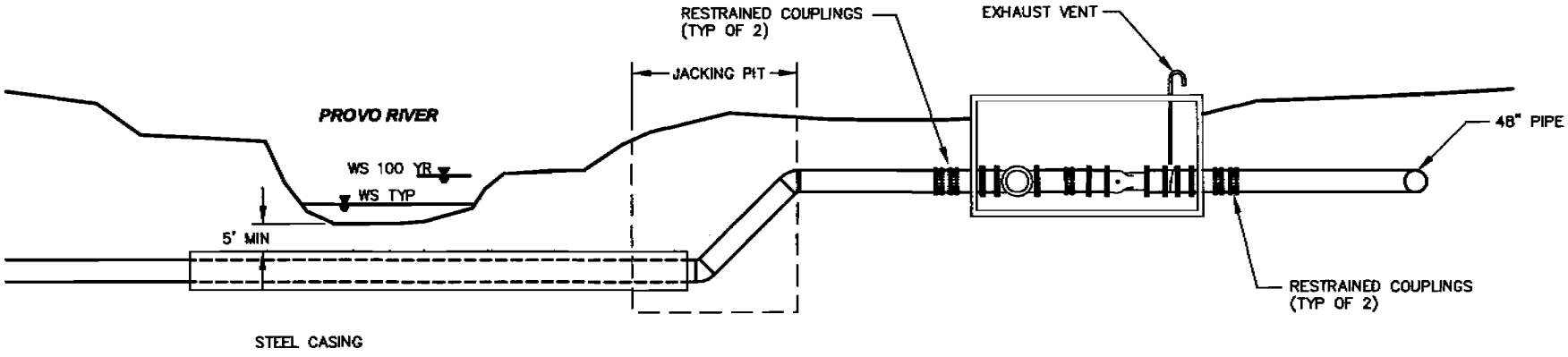

SECTION B

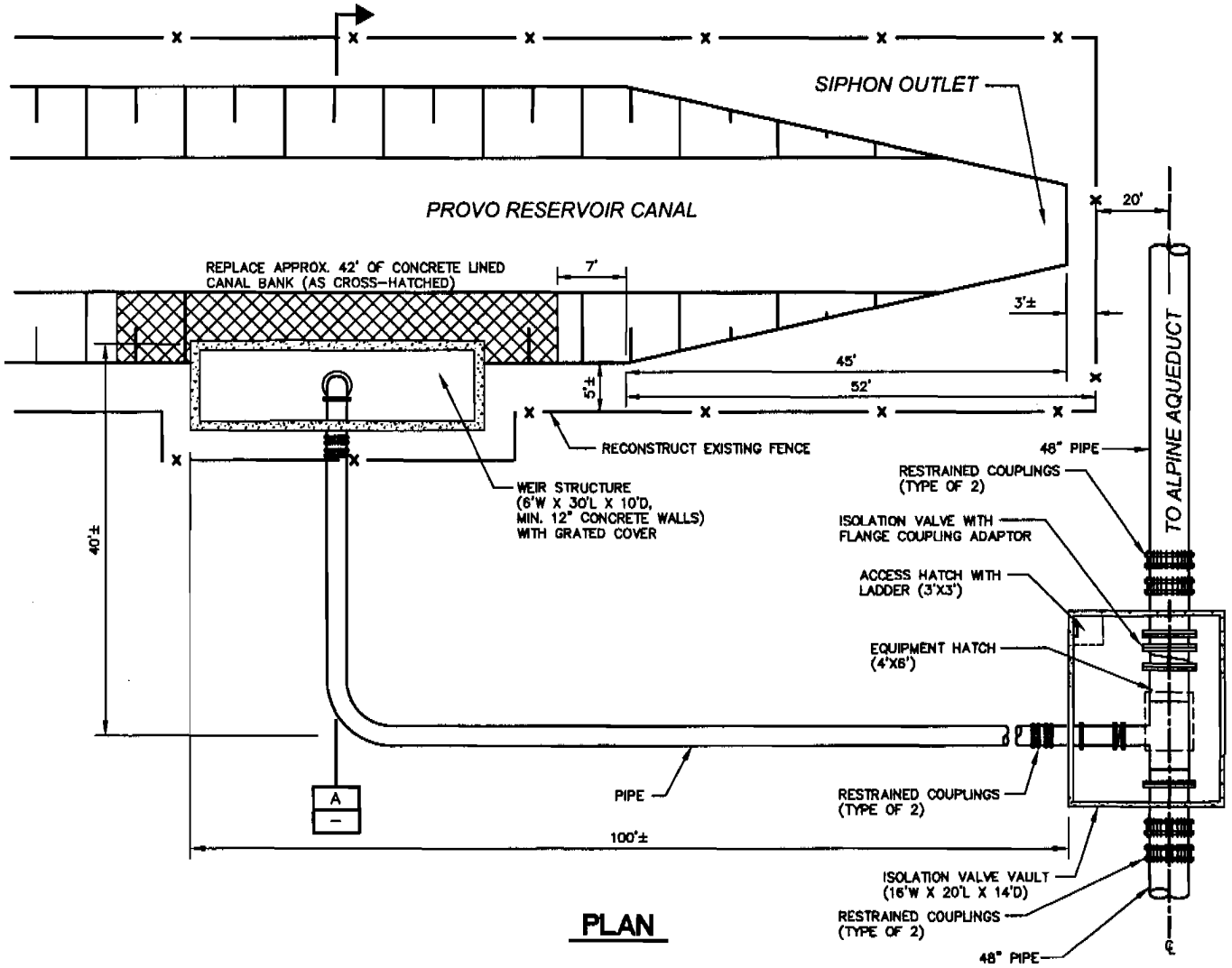

SCALE:			
N/A	MWH MONTGOMERY WATSON HARZA	CUP	CENTRAL UTAH WATER CONSERVANCY DISTRICT SPANISH FORK – PROVO RESERVOIR CANAL ALTERNATIVE PROVO RESERVOIR CANAL DRAINAGE STRUCTURE FIGURE II-B-11

P:\MWH\Central Utah\dwg\Tech Memo 3-B\Sheets\Figures\Fig-3-B-11.dwg, 2/3/2004 4:54:28 PM

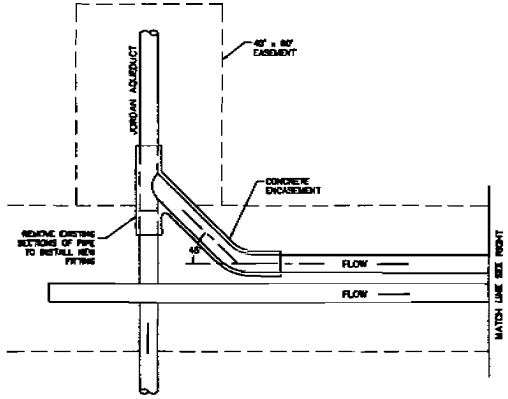

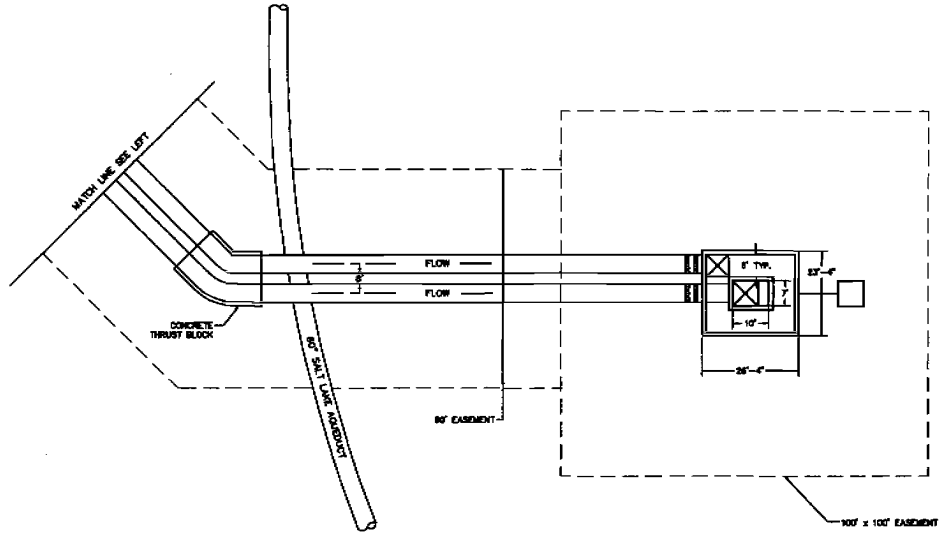

PLAN VIEW

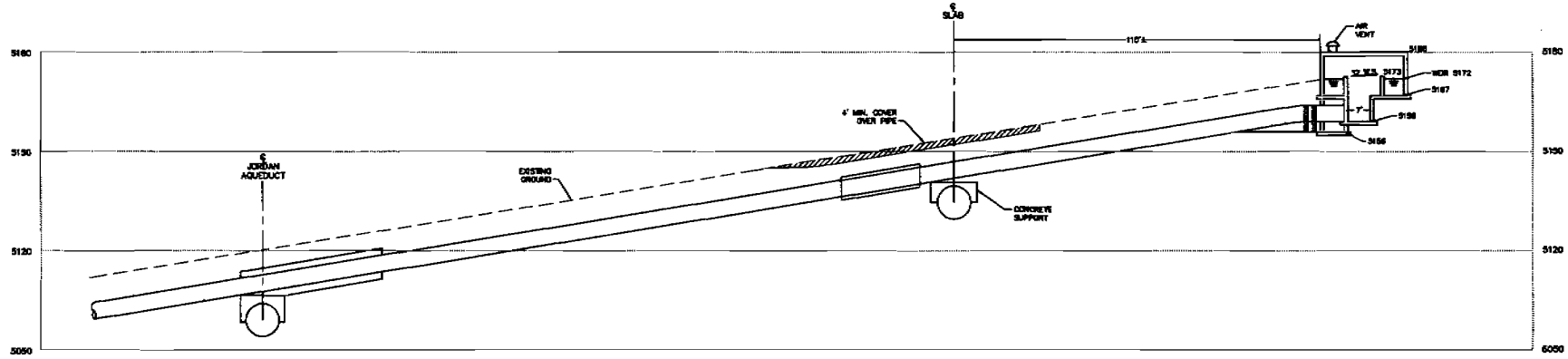

NOT FOR CONSTRUCTION

REV	DATE	BY	DESCRIPTION

SCALE: N/A

WARNING: 0 1/2 1 — IF THIS BAR DOES NOT MEASURE 1" THEN DRAWING IS NOT TO SCALE.

DESIGNED
DRAWN
CHECKED

SUBMITTED
(PROJECT MANAGER'S NAME) R. C. E. NO. DATE
(COMPANY OFFICER'S NAME) R. C. E. NO. DATE

MWH
MONTGOMERY WATSON HARZA

CUP

CENTRAL UTAH WATER CONSERVANCY DISTRICT
SPANISH FORK – PROVO RESERVOIR CANAL PIPELINE
JORDAN AQUEDUCT – CONNECTION STRUCTURE DETAIL
FIGURE II-8-14

PROJECT NO. x
DATE FEBRUARY 2004
DRAWING NO. FIGURE 3-8-14
SHEET NO. 1 of 1

P:\MWH Central Utah Valley\Tech Memo 3-8\Sheets\Figures\Fig-3-8-14.dwg, 3/3/2004 2:09:30 PM

P:\MWH\Central Utah\dwg\Figures\Fig-3-B-16.dwg, 11/22/2003 9:09:00 AM

SCALE: N/A

MWH
MONTGOMERY WATSON HARZA

CUP

CENTRAL UTAH WATER CONSERVANCY DISTRICT

TYPICAL SECTIONS

TYPICAL TRENCH DETAILS

FIGURE III-B-16

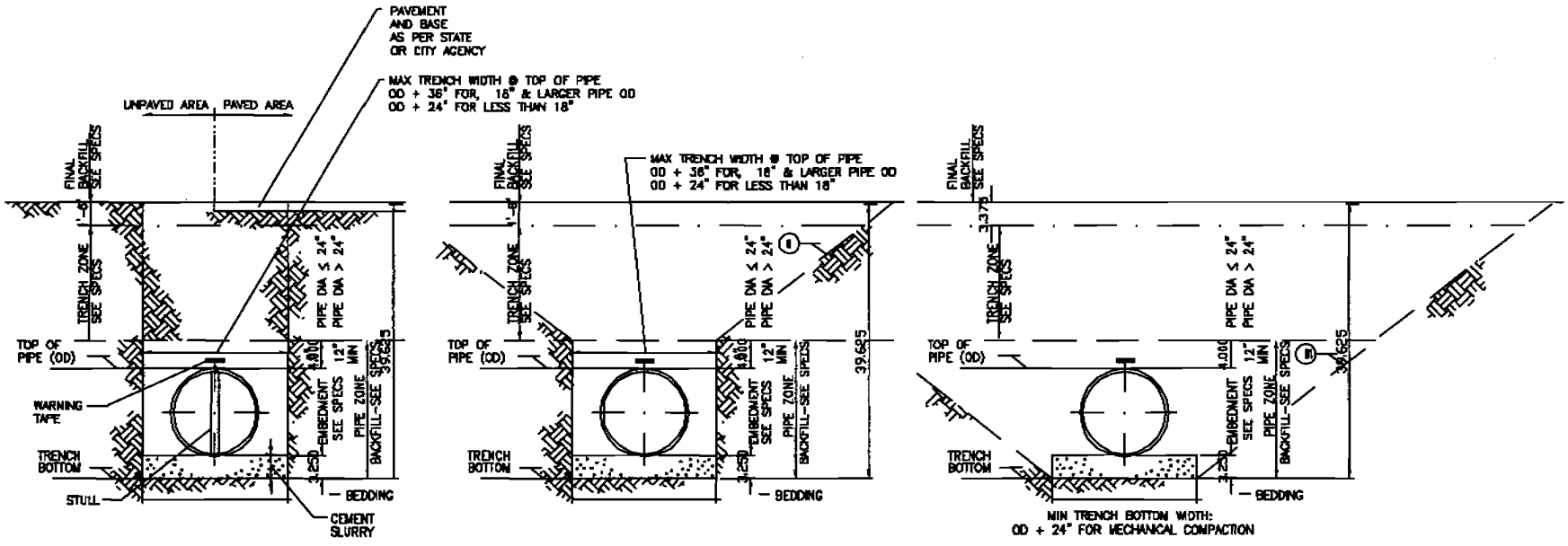

A. FLEXIBLE PIPE REFERS TO ALL STEEL, DUCTILE-IRON AND PLASTIC PIPES.

B. TYPICAL TRENCH SECTIONS (I, II AND III) ARE TO BE USED ONLY WHERE STABLE, COMPACT SOIL CONDITIONS EXIST. IF BOULDER OR LARGE OBSTRUCTIONS WOULD BE ENCOUNTERED, TRENCH SECTIONS MAY BE DEEPER OR WIDER THAN SHOWN. THE ENGINEER SHOULD BE ADVISED SHOULD THIS OCCUR.

C. THE NEED FOR PROTECTIVE SYSTEMS, AND EXCAVATION SLOPES SHALL BE DETERMINED CONSIDERING APPLICABLE LOCAL, STATE AND FEDERAL (OSHA) SAFETY STANDARDS AND REGULATIONS AND GEOTECHNICAL CONSULTANTS' RECOMMENDATIONS.

D. PROTECTIVE SYSTEMS SHALL BE DESIGNED AND BUILT IN ACCORDANCE WITH THE APPLICABLE LOCAL, STATE AND FEDERAL (OSHA) SAFETY STANDARDS AND REGULATIONS.

E. SUPPORTING DOCUMENTATION SHALL BE SUBMITTED TO THE ENGINEER REGARDING PIPE DESIGN AND COMPLIANCE WITH APPLICABLE LOCAL, STATE AND FEDERAL (OSHA) SAFETY STANDARDS.

F. UNSUPPORTED VERTICAL AND/OR SLOPING TRENCH WALL SLOPES SHALL NOT BE STEEPER THAN ALLOWED BY APPLICABLE LOCAL, STATE AND FEDERAL (OSHA) SAFETY STANDARDS AND REGULATIONS, UNLESS SUPPORTING DOCUMENTATION IS SUBMITTED, ACCORDING TO AFOREMENTIONED SAFETY STANDARDS.

G. TRENCH SECTIONS OTHER THAN THE TYPICAL SECTIONS SHOWN MAY BE UTILIZED PROVIDED THEY COMPLY WITH APPLICABLE LOCAL, STATE AND FEDERAL (OSHA) SAFETY STANDARDS AND REGULATIONS. DOCUMENTATION SUPPORTING THIS COMPLIANCE AND PIPE DESIGN CALCULATIONS SHALL BE SUBMITTED TO THE ENGINEER.

H. IF OVER-EXCAVATION DUE TO POOR FOUNDATION MATERIAL IS ORDERED BY THE ENGINEER, THE BACKFILL MATERIAL SHALL BE ACCORDING TO THE EARTHWORK SECTION OF THE SPECIFICATIONS ARTICLE ENTITLED, "USE OF FILL, BACKFILL AND EMBANKMENT MATERIAL TYPES."

I. IF DURING CONSTRUCTION, THE WATER TABLE WILL BE DISCOVERED TO BE ABOVE THE TRENCH BOTTOM, THE ENGINEER SHALL BE NOTIFIED, AND APPROPRIATE DEWATERING SHALL BE IMPLEMENTED TO LOWER THE WATER LEVEL BELOW THE TRENCH BOTTOM. THE BACKFILL MATERIAL SHALL BE ACCORDING TO THE EARTHWORK SECTIONS OF THE SPECIFICATIONS, OR AS ORDERED BY THE ENGINEER.

Central Utah Project Completion Program

Spanish Fork Canyon Pipeline

October 2004

UTAH RECLAMATION
MITIGATION
AND CONSERVATION
COMMISSION

TABLE VIII-3
SUMMARY SHEET
FOR
SPANISH FORK CANYON PIPELINE

	LABOR	MATERIAL	SUB AMOUNT	EQUIPMENT	OTHER	TOTAL	TOTAL w/Markups*
General Conditions	$1,107,050	$147,100	$4,555	$79,300	$87,500	$1,425,505	$2,112,214
Easement Costs	$0	$0	$0	$0	$312,000	$312,000	$462,300
Traffic Control	$286,200	$17,500	$0	$16,750	$0	$320,450	$474,821
Pipeline Costs	$7,378,160	$19,751,145	$4,968,750	$2,390,473	$0	$34,488,528	$51,102,708
Dewatering	$170,800	$73,500	$0	$0	$0	$244,300	$361,987
Erosion Control	$53,356	$971,718	$0	$0	$0	$1,025,074	$1,518,884
Utility work	$105,625	$68,425	$0	$28,400	$0	$202,450	$299,976
Road Restoration & Street Improvements	$97,476	$579,272	$1,250,228	$74,816	$0	$2,001,792	$2,966,117
Landscaping	$26,520	$44,200	$0	$17,680	$0	$88,400	$130,985
Misc. Valves	$91,363	$308,791	$299,200	$16,104	$0	$715,458	$1,060,116
Cathodic Protection	$0	$0	$202,038	$0	$0	$202,038	$299,366
Jack & Bore	$440,340	$662,090	$0	$489,390	$0	$1,591,820	$2,358,648
Total	**$9,756,891**	**$22,623,741**	**$6,724,771**	**$3,112,911**	**$399,500**	**$42,617,814**	**$63,148,120**

* Mark-ups - see Preliminary Design Cost Estimate and Schedule for list of cost markups

Assumptions:

General Assumption - Assumed that pipeli construction would not be constructed concurrently with UDOT road widening efforts (assumed worst case scenario)

General Conditions - Includes permits, te: and inspection, QA/QC plans, field office equipment and personnel, anc mobilization/demobilization

Easement Costs - Include property acquisroperty acquisition costs, title search, appraisals, etc

Traffic Control - Includes pilot cars, flagge:rol - Includes pilot cars, flaggers, etc.

Pipeline Costs - Includes excavation, bacompaction, rock blasting, haul excess material (5 mile haul), 84-inch pipe welded joints, and fittings.

Utility work - Includes relocation or tempo 1 or temporary service for waterlines or fiber optic utilities

Road Restoration - includes asphalt resto tion (6-inch asphalt, 12 base course), temporary shoulder extensions cold mix placement/removal for winter installation, sheet piling or retaining structures as required for shoulder extensions.

Miscellaneous Valves - Air Vacuum/Air Re Valve Structures, Air Release Structures, Drain Valves including drair lines to discharge locations.

Jack & Bore - Assumed 96-inch steel casbre - Assumed 96-inch steel casing

Spreadsheet Level	Takeoff Quantity	Labor Cost/Unit	Labor Price	Labor Amount	Material Price	Material Amount	Sub Amount	Sub Name	Equip Price	Equip Amount	Other Price	Other Amount	Total Cost/Unit	Total Amount
9000 Spanish Fork Canyon Pipeline Alt 2														
01 General Conditions														
0060.000 Land Costs														
Permanent Easement Cost	1.00 ls	-	-	-	-	-	-		-	-	81,000.00 /ls	81,000	81,000.00 /ls	81,000
Temporary Easement Cost	1.00 ls	-	-	-	-	-	-		-	-	223,500.00 /ls	223,500	223,500.00 /ls	223,500
Easements	3.00 ea	-	-	-	-	-	-		-	-	2,500.00 /ea	7,500	2,500.00 /ea	7,500
Apprasial/Negotiation														
Land Costs		*/ls*										*312,000*	*/ls*	*312,000*
1050.100 Permits														
Construction Permits	1.00 ls	-	-	-	/ls		-		-	-	50,000.00 /ls	50,000	50,000.00 /ls	50,000
Permits		*/ls*										*50,000*	*/ls*	*50,000*
1060.100 Documents														
QA/QC Plan	1.00 ls	11,250.00 /ls	11,250.00 /ls	11,250	2,500.00 /ls	2,500	-		-	-	-	-	13,750.00 /ls	13,750
Documents		*/ls*		*11,250*		*2,500*							*/ls*	*13,750*
1065.100 Start-Up & Commissioning														
Survey & Layouts	1.00 ls	42,000.00 /ls	42,000.00 /ls	42,000	5,000.00 /ls	5,000	-		12,000.00 /ls	12,000	-	-	59,000.00 /ls	59,000
Start-Up & Commissioning		*/ls*		*42,000*		*5,000*				*12,000*			*/ls*	*59,000*
1070.100 Photos														
Project Photos	15.00 mo	450.00 /mo	450.00 /mo	6,750	150.00 /mo	2,250	-		-	-	-	-	600.00 /mo	9,000
Photos		*/mo*		*6,750*		*2,250*							*/mo*	*9,000*
1075.100 Signs														
Project Signs 4x8	1.00 ea	150.00 /ea	150.00 /mh	150	250.00 /ea	250	-		-	-	-	-	400.00 /ea	400
Signs		*/ea*		*150*		*250*							*/ea*	*400*
1100.100 Project Management														
Construction Manager	20.00 wk	2,400.00 /wk	2,400.00 /wk	48,000	-	-	-		100.00 /wk	2,000	-	-	2,500.00 /wk	50,000
Project Engineer	65.00 wk	1,500.00 /wk	1,500.00 /wk	97,500	-	-	-		100.00 /wk	6,500	-	-	1,600.00 /wk	104,000
Purchasing Agent	7.00 wk	2,100.00 /wk	2,100.00 /wk	14,700	-	-	-		75.00 /wk	525	-	-	2,175.00 /wk	15,225
Senior Estimator	7.00 wk	1,500.00 /wk	1,500.00 /wk	10,500	-	-	-		75.00 /wk	525	-	-	1,575.00 /wk	11,025
Geotechnical Engineer	65.00 wk	1,600.00 /wk	1,600.00 /wk	104,000	-	-	-		75.00 /wk	4,875	-	-	1,675.00 /wk	108,875
Scheduling Engineer	65.00 wk	1,600.00 /wk	1,600.00 /wk	104,000	-	-	-		75.00 /wk	4,875	-	-	1,675.00 /wk	108,875
Project Management		*/wk*		*378,700*						*19,300*			*/wk*	*398,000*
1102.100 Site Supervision														
General Superintendent	65.00 wk	2,100.00 /wk	2,100.00 /wk	136,500	-	-	-		/wk		-	-	2,100.00 /wk	136,500
Civil Superintendent	65.00 wk	2,100.00 /wk	2,100.00 /wk	136,500	-	-	-		/wk		-	-	2,100.00 /wk	136,500
Assistant Superintendent	65.00 wk	1,500.00 /wk	1,500.00 /wk	97,500	-	-	-		/wk		-	-	1,500.00 /wk	97,500
Site Supervision		*/wk*		*370,500*									*/wk*	*370,500*
1105.100 Clerical Staff														
Project Secretary	65.00 wk	1,400.00 /wk	1,400.00 /wk	91,000	-	-	-		-	-	-	-	1,400.00 /wk	91,000
Time Keeper	65.00 wk	480.00 /wk	480.00 /wk	31,200	-	-	-		-	-	-	-	480.00 /wk	31,200
Clerical Staff		*/wk*		*122,200*									*/wk*	*122,200*
1110.100 Travel														
Weekly Auto Allowance	169.00 wk	-	-	-	75.00 /wk	12,675	-		-	-	-	-	75.00 /wk	12,675
Travel		*/wk*				*12,675*							*/wk*	*12,675*
1200.100 Security														
Watchman	65.00 wk	1,200.00 /wk	1,200.00 /wk	78,000	-	-	2,275		-	-	-	-	1,235.00 /wk	80,275
Conc Jersey Barriers	250.00 lf	-	-	-	8.00 /lf	2,000	-		-	-	-	-	8.00 /lf	2,000

Spreadsheet Level	Takeoff Quantity	Labor Cost/Unit	Labor Price	Labor Amount	Material Price	Material Amount	Sub Amount	Sub Name	Equip Price	Equip Amount	Other Price	Other Amount	Total Cost/Unit	Total Amount
Security		/ls		*78,000*		*2,000*	*2,275*						/ls	*82,275*
1250.100 Offices														
Office Trailer	15.00 mo	-	-	-	-	-	-		1,150.00 /mo	17,250	-	-	1,150.00 /mo	17,250
Offices		/ls								*17,250*			/ls	*17,250*
1255.100 Supplies & Equip														
Copy Machine	15.00 mo	-	-	-	550.00 /mo	8,250	-		-	-	-	-	550.00 /mo	8,250
Personal Computer	45.00 mo	-	-	-	200.00 /mo	9,000	-		-	-	-	-	200.00 /mo	9,000
Software Licenses	45.00 mo	-	-	-	75.00 /mo	3,375	-		-	-	-	-	75.00 /mo	3,375
Desks & Chairs	45.00 mo	-	-	-	5.00 /mo	225	-		-	-	-	-	5.00 /mo	225
File Cabinets	15.00 mo	-	-	-	5.00 /mo	75	-		-	-	-	-	5.00 /mo	75
Postage & Courier Services	15.00 mo	-	-	-	200.00 /mo	3,000	-		-	-	-	-	200.00 /mo	3,000
Fax Machine & Line	15.00 mo	-	-	-	150.00 /mo	2,250	-		-	-	-	-	150.00 /mo	2,250
Office Supplies & Equipment	15.00 mo	-	-	-	150.00 /mo	2,250	-		-	-	-	-	150.00 /mo	2,250
Supplies & Equip		/ls				*28,425*							/ls	*28,425*
1260.100 Utilities														
Electric Power	15.00 mo	-	-	-	700.00 /mo	10,500	-		-	-	-	-	700.00 /mo	10,500
Telephone Charges	15.00 mo	-	-	-	750.00 /mo	11,250	-		-	-	-	-	750.00 /mo	11,250
Temporary Toilets	15.00 mo	-	-	-	150.00 /mo	2,250	-		-	-	-	-	150.00 /mo	2,250
Utilities		/ls				*24,000*							/ls	*24,000*
1270.100 OSHA & Safety														
Safety Officer	65.00 wk	1,500.00 /wk	20.00 /mh	97,500	-	-	-		-	-	-	-	1,500.00 /wk	97,500
First Aid	1.00 ls		/ls		60,000.00 /ls	60,000	-		/ls		-	-	60,000.00 /ls	60,000
OSHA & Safety		/ls		*97,500*		*60,000*							/ls	*157,500*
1300.100 Allowances														
Office Furniture - Allowance	1.00 ls		/ls		10,000.00 /ls	10,000			-	-	-	-	10,000.00 /ls	10,000
Traffic Control, 3 each Flaggers	195.00 wk	1,080.00 /wk	1,080.00 /wk	210,600	/wk		-		50.00 /wk	9,750	-	-	1,130.00 /wk	220,350
Traffic Control, Pilot Car & Driver	70.00 wk	1,080.00 /wk	1,080.00 /wk	75,600	250.00 /wk	17,500	-		100.00 /wk	7,000	-	-	1,430.00 /wk	100,100
Allowances		/ls		*286,200*		*27,500*				*16,750*			/ls	*330,450*
1460.100 Testing														
Misc Test & Inspection	15.00 mo	-	-	-	-	-			-	-	2,500.00 /mo	37,500	2,500.00 /mo	37,500
Testing		/ls										*37,500*	/ls	*37,500*
1630.100 Mobilization / Demobiliza														
Mobilization / Demobilization	12.00 ea		/ea		-	-	2,280		/ea		-	-	190.00 /ea	2,280
Mobilization / Demobiliza		/ls					*2,280*						/ls	*2,280*
2502.012 Trench Shoring														
Trench Box, 16' Deep, 2 each	30.00 mo	-	-	-	-	-	-		1,025.00 /mo	30,750	-	-	1,025.00 /mo	30,750
Trench Shoring		/mo								*30,750*			/mo	*30,750*
01 General Conditions				**1,393,250**		**164,600**	**4,555**			**96,050**		**399,500**		**2,057,955**
401 Station 100+00 to 140+00														
2240.120 Dewatering														
Wellpoint Dewatering	0.90 mo	24,400.00 /mo	18.00 /mh	21,960	10,500.00 /mo	9,450	-		/mo		-	-	34,900.00 /mo	31,410
Dewatering		/mo		*21,960*		*9,450*							/mo	*31,410*
2316.150 Rock Excavation														

Spreadsheet Level	Takeoff Quantity	Labor Cost/Unit	Labor Price	Labor Amount	Material Price	Material Amount	Sub Amount	Sub Name	Equip Price	Equip Amount	Other Price	Other Amount	Total Cost/Unit	Total Amount
2316.150 Rock Excavation														
Rock Excavation, Hydraulic Hoe Ram -Medium	11,038.00 cy	1.25 /cy	236.72 /cd	13,798	-	-	-		2.12 /cy	23,401	-	-	3.37 /cy	37,198
Rock Excavation		*/cy*		*13,798*						*23,401*			*/cy*	*37,198*
2316.155 Rock Blasting														
Rock Blasting-Trench	11,038.00 cy	2.72 /cy	2.72 /cy	30,023	1.95 /cy	21,524	-		2.95 /cy	32,562	/cy		7.62 /cy	84,110
Rock Blasting		*/cy*		*30,023*		*21,524*				*32,562*			*/cy*	*84,110*
2316.202 Pipe Excavation														
Excavate Silt-Clay, Loam, Hydraulic Hoe	11,038.00 cy	0.94 /cy	140.08 /cd	10,376	-	-	-		1.60 /cy	17,661	-	-	2.54 /cy	28,037
Backfill and Compact, Machine	16,400.00 cy	1.53 /cy	140.08 /cd	25,092	-	-	-		0.89 /cy	14,596	-	-	2.42 /cy	39,688
Excess Material, 5 Mile Haul, Offsite	12,000.00 cy	2.86 /cy	140.08 /cd	34,320	-	-	-		7.01 /cy	84,120	-	-	9.87 /cy	118,440
Pipe Excavation		*/cy*		*69,788*						*116,377*			*/cy*	*186,164*
2370.150 Temp Erosion Control														
Erosion Control Mats-Slopes	48,000.00 sf	0.12 /sf	12.08 /ch	5,798	2.00 /sf	105,600	-		-	-	-	-	2.32 /sf	111,398
Temp Erosion Control		*/sf*		*5,798*		*105,600*							*/sf*	*111,398*
2446.100 Pipe Bore and Jack														
Pipe Boring 96" Casing, Creek Crossing, Station 131+50	50.00 lf	557.00 /lf	557.00 /lf	27,850	676.00 /lf	33,800			420.00 /lf	21,000	-	-	1,653.00 /lf	82,650
Pipe Boring 96" Casing, Creek Crossing, Station 139+10	50.00 lf	557.00 /lf	557.00 /lf	27,850	676.00 /lf	33,800			420.00 /lf	21,000	-	-	1,653.00 /lf	82,650
Receiving Pits, Creek Crossing, Station 131+50	1.00 ea	450.00 /ea	450.00 /ea	450	1,530.00 /ea	1,530	-		1,580.00 /ea	1,580	-	-	3,560.00 /ea	3,560
Receiving Pits, Creek Crossing, Station 139+10	1.00 ea	450.00 /ea	450.00 /ea	450	1,530.00 /ea	1,530	-		1,580.00 /ea	1,580	-	-	3,560.00 /ea	3,560
Entry Pit, Creek Crossing, Station 131+50	1.00 ea	3,430.00 /ea	3,430.00 /ea	3,430	13,000.00 /ea	13,000	-		13,450.00 /ea	13,450	-	-	29,880.00 /ea	29,880
Entry Pit, Creek Crossing, Station 139+10	1.00 ea	3,430.00 /ea	3,430.00 /ea	3,430	13,000.00 /ea	13,000	-		13,450.00 /ea	13,450	-	-	29,880.00 /ea	29,880
Pipe Bore and Jack		*/lf*		*63,460*		*95,650*				*72,060*			*/lf*	*232,180*
2502.014 Pipe Bedding														
Utility Bed Gravel-Crushed	6,300.00 cy	2.86 /cy	96.64 /cd	18,018	10.00 /cy	69,300	-		1.74 /cy	10,962	-	-	15.60 /cy	98,280
Pipe Bedding		*/cy*		*18,018*		*69,300*				*10,962*			*/cy*	*98,280*
2580.500 Utility Conflicts														
Utility Conflicts	1.00 ea	21,125.00 /ea	25.00 /mh	21,125	13,685.00 /ea	13,685	-		5,680.00 /ea	5,680	-	-	40,490.00 /ea	40,490
Utility Conflicts		*/ea*		*21,125*		*13,685*				*5,680*			*/ea*	*40,490*
2630.006 Catch Basin 6'														
8" Blow-Off Drainage System, 102+00	1.00 ea		/ch		/ea	35,500			/ch		-	-	35,500.00 /ea	35,500
Catch Basin 6'		*/ea*				*35,500*							*/ea*	*35,500*
2740.120 Asphalt Paving - SY														
Compacted Base 12", 4000 LF by 24'	10,670.00 sy	-	-	-	-	-	223,323		-	-	-	-	20.93 /sy	223,323

Spreadsheet Level	Takeoff Quantity	Labor Cost/Unit	Labor Price	Labor Amount	Material Price	Material Amount	Sub Amount	Sub Name	Equip Price	Equip Amount	Other Price	Other Amount	Total Cost/Unit	Total Amount
2740.120 Asphalt Paving - SY														
Bituminous Top Course 6", 4000 LF by 24'	10,670.00 sy	0.76 /sy	0.76 /sy	8,109	8.45 /sy	90,162			0.55 /sy	5,869	-	-	9.76 /sy	104,139
Wear Course 1 1/2", 4000 LF by 24'	10,670.00 sy	0.35 /sy	0.35 /sy	3,735	2.41 /sy	25,715			0.25 /sy	2,668	-	-	3.01 /sy	32,117
Asphalt Paving - SY		*/sy*		*11,844*		*115,876*	*223,323*			*8,536*			*/sy*	*359,579*
2950.000 SITE RESTORATION														
Restore Landscaping	96.00 msf	30.00 /msf	30.00 /msf	2,880	50.00 /msf	4,800	-		20.00 /msf	1,920	-	-	100.00 /msf	9,600
SITE RESTORATION		*/msf*		*2,880*		*4,800*				*1,920*			*/msf*	*9,600*
15230.301 XH Pipe PE														
84" Steel Pipe, 250 psi, Mortar Lined & Coated	4,000.00 lf	27.50 /lf	16.78 /mh	110,000	439.00 /lf	1,756,000	-		12.00 /lf	48,000	-	-	478.50 /lf	1,914,000
Welding per Joint - 84"	88.00 ea	6,351.00 /ea	6,351.00 /ea	558,888	175.00 /ea	15,400	-		140.00 /ea	12,320	-	-	6,666.00 /ea	586,608
XH Pipe PE		*/lf*		*668,888*		*1,771,400*				*60,320*			*/lf*	*2,500,608*
15230.314 Pipe Fittings														
84" Pipe Fittings	2.00 ea	1,050.00 /ea	16.78 /mh	2,100	20,300.00 /ea	40,600	-		175.00 /ea	350	-	-	21,525.00 /ea	43,050
Pipe Fittings		*/ea*		*2,100*		*40,600*				*350*			*/ea*	*43,050*
15230.340 Turn Outs, Drains, Air Re														
Drain Vault, 10"	1.00 ea	9,150.00 /ea	9,150.00 /ea	9,150	27,936.00 /ea	27,936	-		646.00 /ea	646	-	-	37,732.00 /ea	37,732
Air Vacuum/Air Release Vault, 14"	1.00 ea	5,078.00 /ea	5,078.00 /ea	5,078	31,975.00 /ea	31,975	-		757.00 /ea	757	-	-	37,810.00 /ea	37,810
Air Release Vault, 2"	1.00 ea	2,937.00 /ea	2,937.00 /ea	2,937	6,298.00 /ea	6,298	-		479.00 /ea	479	-	-	9,714.00 /ea	9,714
Turn Outs, Drains, Air Re		*/ea*		*17,165*		*66,209*				*1,882*			*/ea*	*85,256*
16151.110 Cathodic Protection														
Cathodic Protection, Impressed Current	4,000.00 lf		/mh		/lf		4.000	-	-	-	-	-	1.00 /lf	4,000
Joint Seal	88.00 ea		/mh		/ea		11.000	-	-	-	-	-	125.00 /ea	11,000
Joint Bond	88.00 ea		/mh		/ea		5,280	-	-	-	-	-	60.00 /ea	5,280
Test Station at 1000 LF	4.00 ea		/mh		/ea		1,600	-	-	-	-	-	400.00 /ea	1,600
Cathodic Protection		*/lf*					*21,880*						*/lf*	*21,880*
401 Station 100+00 to 140+00				**946,847**		**2,315,104**	**280,703**			**334,049**				**3,876,704**
402 Station 140+00 to 310+00														
2223.100 Demo Site Improvements														
Demo Bituminous Pave < 3"	128,800.00 sf	0.17 /sf	41.67 /ch	21,468	-	-	-		35.00 /ch	18,032	-	-	0.31 /sf	39,500
Demo Site Improvements		*/ls*		*21,468*						*18,032*			*/ls*	*39,500*
2240.120 Dewatering														
Wellpoint Dewatering	3.60 mo	24,400.00 /mo	18.00 /mh	87,840	10,500.00 /mo	37,800	-		/mo		-	-	34,900.00 /mo	125,640
Dewatering		*/mo*		*87,840*		*37,800*							*/mo*	*125,640*
2316.150 Rock Excavation														
Rock Excavation, Hydraulic Hoe Ram - Medium	46,920.00 cy	1.25 /cy	236.72 /cd	58,650	-	-	-		2.12 /cy	99,470	-	-	3.37 /cy	158,120
Rock Excavation		*/cy*		*58,650*						*99,470*			*/cy*	*158,120*
2316.155 Rock Blasting														
Rock Blasting-Trench	46,920.00 cy	2.72 /cy	2.72 /cy	127,622	1.95 /cy	91,494	-		2.95 /cy	138,414	/cy		7.62 /cy	357,530
Rock Blasting		*/cy*		*127,622*		*91,494*				*138,414*			*/cy*	*357,530*
2316.202 Pipe Excavation														

Spreadsheet Level	Takeoff Quantity	Labor Cost/Unit	Labor Price	Labor Amount	Material Price	Material Amount	Sub Amount	Sub Name	Equip Price	Equip Amount	Other Price	Other Amount	Total Cost/Unit	Total Amount
2316.202 Pipe Excavation														
Excavate Silt-Clay, Loam, Hydraulic Hoe	46,920.00 cy	0.94 /cy	140.08 /cd	44,105	-	-	-		1.60 /cy	75,072	-	-	2.54 /cy	119,177
Backfill and Compact, Machine	69,650.00 cy	1.53 /cy	140.08 /cd	106,564	-	-	-		0.89 /cy	61,989	-	-	2.42 /cy	168,553
Excess Material, 5 Mile Haul, Offsite	51,000.00 cy	2.86 /cy	140.08 /cd	145,860	-	-	-		7.01 /cy	357,510	-	-	9.87 /cy	503,370
Temporary Fill Material, 5 Mile Haul, Station 218+00 to 226+00	2,074.00 cy	2.86 /cy	140.08 /cd	5,932	5.00 /cy	10,370	-		7.01 /cy	14,539	-	-	14.87 /cy	30,840
Temporary Fill Material, 5 Mile Haul, Station 265+00 to 274+00	2,334.00 cy	2.86 /cy	140.08 /cd	6,675	5.00 /cy	11,670	-		7.01 /cy	16,361	-	-	14.87 /cy	34,707
Temporary Fill Material, 5 Mile Haul, Station 285+00 to 308+50	6,093.00 cy	2.86 /cy	140.08 /cd	17,426	5.00 /cy	30,465	-		7.01 /cy	42,712	-	-	14.87 /cy	90,603
Pipe Excavation		*/cy*		*326,562*		*52,505*				*568,183*			*/cy*	*947,249*
2370.150 Temp Erosion Control														
Erosion Control Mats-Slopes	204,000.00 sf	0.12 /sf	12.08 /ch	24,643	2.00 /sf	448,800	-		-	-	-	-	2.32 /sf	473,443
Temp Erosion Control		*/sf*		*24,643*		*448,800*							*/sf*	*473,443*
2446.100 Pipe Bore and Jack														
Pipe Boring, 96" Casing, Creek Crossing, Station 164+40	50.00 lf	557.00 /lf	557.00 /lf	27,850	676.00 /lf	33,800			420.00 /lf	21,000	-	-	1,653.00 /lf	82,650
Pipe Boring, 96" Casing, Creek Crossing, Station 188+50	50.00 lf	557.00 /lf	557.00 /lf	27,850	676.00 /lf	33,800			420.00 /lf	21,000	-	-	1,653.00 /lf	82,650
Pipe Boring, 96" Casing, Creek Crossing, Station 206+00	50.00 lf	557.00 /lf	557.00 /lf	27,850	676.00 /lf	33,800			420.00 /lf	21,000	-	-	1,653.00 /lf	82,650
Pipe Boring, 96" Casing, Creek Crossing, Station 223+00	50.00 lf	557.00 /lf	557.00 /lf	27,850	676.00 /lf	33,800			420.00 /lf	21,000	-	-	1,653.00 /lf	82,650
Pipe Boring, 96" Casing, Creek Crossing, Station 265+00	50.00 lf	557.00 /lf	557.00 /lf	27,850	676.00 /lf	33,800			420.00 /lf	21,000	-	-	1,653.00 /lf	82,650
Pipe Boring, 96" Casing, Creek Crossing, Station 283+75	50.00 lf	557.00 /lf	557.00 /lf	27,850	676.00 /lf	33,800			420.00 /lf	21,000	-	-	1,653.00 /lf	82,650
Pipe Boring, 96" Casing, Creek Crossing, Station 306+70	50.00 lf	557.00 /lf	557.00 /lf	27,850	676.00 /lf	33,800			420.00 /lf	21,000	-	-	1,653.00 /lf	82,650
Receiving Pits, Creek Crossing, Station 164+40	1.00 ea	450.00 /ea	450.00 /ea	450	1,530.00 /ea	1,530	-		1,580.00 /ea	1,580	-	-	3,560.00 /ea	3,560
Entry Pits, Creek Crossing, Station 164+40	1.00 ea	3,430.00 /ea	3,430.00 /ea	3,430	13,000.00 /ea	13,000	-		13,450.00 /ea	13,450	-	-	29,880.00 /ea	29,880
Receiving Pits, Creek Crossing, Station 188+50	1.00 ea	450.00 /ea	450.00 /ea	450	1,530.00 /ea	1,530	-		1,580.00 /ea	1,580	-	-	3,560.00 /ea	3,560
Entry Pits, Creek Crossing, Station 188+50	1.00 ea	3,430.00 /ea	3,430.00 /ea	3,430	13,000.00 /ea	13,000	-		13,450.00 /ea	13,450	-	-	29,880.00 /ea	29,880
Receiving Pits, Creek Crossing, Station 206+00	1.00 ea	450.00 /ea	450.00 /ea	450	1,530.00 /ea	1,530	-		1,580.00 /ea	1,580	-	-	3,560.00 /ea	3,560
Entry Pits, Creek Crossing, Station 206+00	1.00 ea	3,430.00 /ea	3,430.00 /ea	3,430	13,000.00 /ea	13,000	-		13,450.00 /ea	13,450	-	-	29,880.00 /ea	29,880

Spreadsheet Level	Takeoff Quantity	Labor Cost/Unit	Labor Price	Labor Amount	Material Price	Material Amount	Sub Amount	Sub Name	Equip Price	Equip Amount	Other Price	Other Amount	Total Cost/Unit	Total Amount
2446.100 Pipe Bore and Jack														
Receiving Pits, Creek Crossing, Station 223+00	1.00 ea	450.00 /ea	450.00 /ea	450	1,530.00 /ea	1,530	-		1,580.00 /ea	1,580	-	-	3,560.00 /ea	3,560
Entry Pits, Creek Crossing, Station 223+00	1.00 ea	3,430.00 /ea	3,430.00 /ea	3,430	13,000.00 /ea	13,000	-		13,450.00 /ea	13,450	-	-	29,880.00 /ea	29,880
Receiving Pits, Creek Crossing, Station 265+00	1.00 ea	450.00 /ea	450.00 /ea	450	1,530.00 /ea	1,530	-		1,580.00 /ea	1,580	-	-	3,560.00 /ea	3,560
Entry Pits, Creek Crossing, Station 265+00	1.00 ea	3,430.00 /ea	3,430.00 /ea	3,430	13,000.00 /ea	13,000	-		13,450.00 /ea	13,450	-	-	29,880.00 /ea	29,880
Receiving Pits, Creek Crossing, Station 283+75	1.00 ea	450.00 /ea	450.00 /ea	450	1,530.00 /ea	1,530	-		1,580.00 /ea	1,580	-	-	3,560.00 /ea	3,560
Entry Pits, Creek Crossing, Station 283+75	1.00 ea	3,430.00 /ea	3,430.00 /ea	3,430	13,000.00 /ea	13,000	-		13,450.00 /ea	13,450	-	-	29,880.00 /ea	29,880
Receiving Pits, Creek Crossing, Station 306+70	1.00 ea	450.00 /ea	450.00 /ea	450	1,530.00 /ea	1,530	-		1,580.00 /ea	1,580	-	-	3,560.00 /ea	3,560
Entry Pits, Creek Crossing, Station 306+70	1.00 ea	3,430.00 /ea	3,430.00 /ea	3,430	13,000.00 /ea	13,000	-		13,450.00 /ea	13,450	-	-	29,880.00 /ea	29,880
Pipe Bore and Jack		*/lf*		*222,110*		*338,310*				*252,210*			*/lf*	*812,630*
2451.118 Sheetpiling														
Sheetpiling Left in Place, Station 218+00 to 226+00	20,000.00 sf	-	-	-	-	-	500,000		-	-	-	-	25.00 /sf	500,000
Sheetpiling Left in Place, Station 265+00 to 274+00	22,500.00 sf	-	-	-	-	-	562,500		-	-	-	-	25.00 /sf	562,500
Sheetpiling Left in Place, Station 285+00 to 308+50	58,750.00 sf	-	-	-	-	-	1,468,750		-	-	-	-	25.00 /sf	1,468,750
Sheetpiling		*/ls*					*2,531,250*						*/ls*	*2,531,250*
2502.014 Pipe Bedding														
Utility Bed Gravel-Crushed	26,780.00 cy	2.86 /cy	96.64 /cd	76,591	10.00 /cy	294,580	-		1.74 /cy	46,597	-	-	15.60 /cy	417,768
Pipe Bedding		*/cy*		*76,591*		*294,580*				*46,597*			*/cy*	*417,768*
2580.500 Utility Conflicts														
Utility Conflicts	2.00 ea	21,125.00 /ea	25.00 /mh	42,250	13,685.00 /ea	27,370	-		5,680.00 /ea	11,360	-	-	40,490.00 /ea	80,980
Utility Conflicts		*/ea*		*42,250*		*27,370*				*11,360*			*/ea*	*80,980*
2630.006 Catch Basin 6'														
8" Blow-Off Drainage System, 222+00	1.00 ea		/ch		/ea		54,600		/ch		-	-	54,600.00 /ea	54,600
8" Blow-Off Drainage System, 253+00	1.00 ea		/ch		/ea		47,100		/ch		-	-	47,100.00 /ea	47,100
Catch Basin 6'		*/ea*					*101,700*						*/ea*	*101,700*
2740.120 Asphalt Paving - SY														
Cold Laid Bituminous Base Course 3", Station 218+00 to 226+00	1,245.00 sy	-	-	-	-	-	7,744		-	-	-	-	6.22 /sy	7,744
Cold Laid Bituminous Base Course 3", Station 265+00 to 274+00	1,400.00 sy	-	-	-	-	-	8,708		-	-	-	-	6.22 /sy	8,708
Cold Laid Bituminous Base Course 3", Station 285+00 to 308+50	3,656.00 sy	-	-	-	-	-	22,740		-	-	-	-	6.22 /sy	22,740
Compacted Base 12", 8000 LF by 24'	21,340.00 sy	-	-	-	-	-	446,646		-	-	-	-	20.93 /sy	446,646

Spreadsheet Level	Takeoff Quantity	Labor Cost/Unit	Labor Price	Labor Amount	Material Price	Material Amount	Sub Amount	Sub Name	Equip Price	Equip Amount	Other Price	Other Amount	Total Cost/Unit	Total Amount
2740.120 Asphalt Paving - SY														
Compacted Base 4", Temporary Road	6,301.00 sy	-	-	-	-	-	28,985		-	-	-	-	4.60 /sy	28,985
Bituminous Top Course 6", 8000 LF by 24'	21,340.00 sy	0.76 /sy	0.76 /sy	16,218	8.45 /sy	180,323			0.55 /sy	11,737	-	-	9.76 /sy	208,278
Wear Course 1 1/2", 8000 LF by 24'	21,340.00 sy	0.35 /sy	0.35 /sy	7,469	2.41 /sy	51,429			0.25 /sy	5,335	-	-	3.01 /sy	64,233
Asphalt Paving - SY		*/sy*		*23,687*		*231,752*	*514,823*			*17,072*			*/sy*	*787,335*
2950.000 SITE RESTORATION														
Restore Landscaping	408.00 msf	30.00 /msf	30.00 /msf	12,240	50.00 /msf	20,400	-		20.00 /msf	8,160	-	-	100.00 /msf	40,800
SITE RESTORATION		*/msf*		*12,240*		*20,400*				*8,160*			*/msf*	*40,800*
15230.301 XH Pipe PE														
84" Steel Pipe, 300 psi, Mortar Lined & Coated	17,000.00 lf	27.50 /lf	16.78 /mh	467,501	481.00 /lf	8,177,000	-		12.00 /lf	204,000	-	-	520.50 /lf	8,848,501
Welding per Joint - 84"	362.00 ea	6,351.00 /ea	6,351.00 /ea	2,299,062	175.00 /ea	63,350	-		140.00 /ea	50,680	-	-	6,666.00 /ea	2,413,092
XH Pipe PE		*/lf*		*2,766,563*		*8,240,350*				*254,680*			*/lf*	*11,261,593*
15230.314 Pipe Fittings														
84" Pipe Fittings	6.00 ea	1,050.00 /ea	16.78 /mh	6,300	20,300.00 /ea	121,800	-		175.00 /ea	1,050	-	-	21,525.00 /ea	129,150
Pipe Fittings		*/ea*		*6,300*		*121,800*				*1,050*			*/ea*	*129,150*
15230.340 Turn Outs, Drains, Air Re														
Drain Vault, 8"	1.00 ea	9,093.00 /ea	9,093.00 /ea	9,093	23,290.00 /ea	23,290	-		2,080.00 /ea	2,080	-	-	34,463.00 /ea	34,463
Air Release Vault, 2"	3.00 ea	2,937.00 /ea	2,937.00 /ea	8,811	6,298.00 /ea	18,894	-		479.00 /ea	1,437	-	-	9,714.00 /ea	29,142
Air Vacuum/Air Release Vault, 14"	2.00 ea	5,078.00 /ea	5,078.00 /ea	10,156	31,975.00 /ea	63,950	-		757.00 /ea	1,514	-	-	37,810.00 /ea	75,620
Drain Vault, 8" w/AC	1.00 ea	9,093.00 /ea	9,093.00 /ea	9,093	23,590.00 /ea	23,590	-		2,080.00 /ea	2,080	-	-	34,763.00 /ea	34,763
Turn Outs, Drains, Air Re		*/ea*		*37,153*		*129,724*				*7,111*			*/ea*	*173,988*
16151.110 Cathodic Protection														
Cathodic Protection, Impressed Current	17,000.00 lf		/mh		/lf		17,000		-	-	-	-	1.00 /lf	17,000
Joint Seal	362.00 ea		/mh		/ea		45,250		-	-	-	-	125.00 /ea	45,250
Joint Bond	362.00 ea		/mh		/ea		21,720		-	-	-	-	60.00 /ea	21,720
Test Station at 1000 LF	17.00 ea		/mh		/ea		6,800		-	-	-	-	400.00 /ea	6,800
Cathodic Protection		*/lf*					*90,770*						*/lf*	*90,770*
402 Station 140+00 to 310+00				**3,833,680**		**10,034,885**	**3,238,543**			**1,422,339**				**18,529,448**
403 Station 310+00 to 468+08														
2223.100 Demo Site Improvements														
Demo Bituminous Pave < 3"	100,800.00 sf	0.17 /sf	41.67 /ch	16,801	-	-	-		35.00 /ch	14,112	-	-	0.31 /sf	30,913
Demo Site Improvements		*/ls*		*16,801*						*14,112*			*/ls*	*30,913*
2240.120 Dewatering														
Wellpoint Dewatering	2.50 mo	24,400.00 /mo	18.00 /mh	61,000	10,500.00 /mo	26,250	-		/mo		-	-	34,900.00 /mo	87,250
Dewatering		*/mo*		*61,000*		*26,250*							*/mo*	*87,250*
2316.150 Rock Excavation														
Rock Excavation, Hydraulic Hoe Ram -Medium	43,630.00 cy	1.25 /cy	236.72 /cd	54,538	-	-	-		2.12 /cy	92,496	-	-	3.37 /cy	147,033
Rock Excavation		*/cy*		*54,538*						*92,496*			*/cy*	*147,033*
2316.155 Rock Blasting														
Rock Blasting-Trench	43,630.00 cy	2.72 /cy	2.72 /cy	118,674	1.95 /cy	85,079	-		2.95 /cy	128,709	/cy		7.62 /cy	332,461

Spreadsheet Level	Takeoff Quantity	Labor Cost/Unit	Labor Price	Labor Amount	Material Price	Material Amount	Sub Amount	Sub Name	Equip Price	Equip Amount	Other Price	Other Amount	Total Cost/Unit	Total Amount
Rock Blasting		*/cy*		*118,674*		*85,079*				*128,709*			*/cy*	*332,461*
2316.202 Pipe Excavation														
Excavate Silt-Clay, Loam, Hydraulic Hoe	43,630.00 cy	0.94 /cy	140.08 /cd	41,012	-	-	-		1.60 /cy	69,808	-	-	2.54 /cy	110,820
Backfill and Compact, Machine	64,760.00 cy	1.53 /cy	140.08 /cd	99,083	-	-	-		0.89 /cy	57,636	-	-	2.42 /cy	156,719
Excess Material, 5 Mile Haul, Offsite	47,440.00 cy	2.86 /cy	140.08 /cd	135,678	-	-	-		7.01 /cy	332,554	-	-	9.87 /cy	468,233
Temporary Fill Material, 5 Mile Haul, Station 320+00 to 336+00	4,148.00 cy	2.86 /cy	140.08 /cd	11,863	5.00 /cy	20,740	-		7.01 /cy	29,077	-	-	14.87 /cy	61,681
Temporary Fill Material, 5 Mile Haul, Station 348+00 to 359+00	2,852.00 cy	2.86 /cy	140.08 /cd	8,157	5.00 /cy	14,260	-		7.01 /cy	19,993	-	-	14.87 /cy	42,409
Temporary Fill Material, 5 Mile Haul, Station 368+00 to 380+00	3,111.00 cy	2.86 /cy	140.08 /cd	8,897	5.00 /cy	15,555	-		7.01 /cy	21,808	-	-	14.87 /cy	46,261
Pipe Excavation		*/cy*		*304,691*		*50,555*				*530,877*			*/cy*	*886,123*
2370.150 Temp Erosion Control														
Erosion Control Mats-Slopes	189,690.00 sf	0.12 /sf	12.08 /ch	22,915	2.00 /sf	417,318	-		-	-	-	-	2.32 /sf	440,233
Temp Erosion Control		*/sf*		*22,915*		*417,318*							*/sf*	*440,233*
2446.100 Pipe Bore and Jack														
Pipe Boring 96" Casing, Creek Crossing, Station 325+50	50.00 lf	557.00 /lf	557.00 /lf	27,850	676.00 /lf	33,800			420.00 /lf	21,000	-	-	1,653.00 /lf	82,650
Pipe Boring 96" Casing, Creek Crossing, Station 365+50	50.00 lf	557.00 /lf	557.00 /lf	27,850	676.00 /lf	33,800			420.00 /lf	21,000	-	-	1,653.00 /lf	82,650
Pipe Boring 96" Casing, Creek Crossing, Station 383+97	50.00 lf	557.00 /lf	557.00 /lf	27,850	676.00 /lf	33,800			420.00 /lf	21,000	-	-	1,653.00 /lf	82,650
Pipe Boring 96" Casing, RR Crossing, Station 392+00	100.00 lf	557.00 /lf	557.00 /lf	55,700	676.00 /lf	67,600			420.00 /lf	42,000	-	-	1,653.00 /lf	165,300
Receiving Pits, Creek Crossing, Station 325+50	1.00 ea	450.00 /ea	450.00 /ea	450	1,530.00 /ea	1,530	-		1,580.00 /ea	1,580	-	-	3,560.00 /ea	3,560
Entry Pits, Creek Crossing, Station 325+50	1.00 ea	3,430.00 /ea	3,430.00 /ea	3,430	13,000.00 /ea	13,000	-		13,450.00 /ea	13,450	-	-	29,880.00 /ea	29,880
Receiving Pits, Creek Crossing, Station 365+50	1.00 ea	450.00 /ea	450.00 /ea	450	1,530.00 /ea	1,530	-		1,580.00 /ea	1,580	-	-	3,560.00 /ea	3,560
Entry Pits, Creek Crossing, Station 365+50	1.00 ea	3,430.00 /ea	3,430.00 /ea	3,430	13,000.00 /ea	13,000	-		13,450.00 /ea	13,450	-	-	29,880.00 /ea	29,880
Receiving Pits, Creek Crossing, Station 383+97	1.00 ea	450.00 /ea	450.00 /ea	450	1,530.00 /ea	1,530	-		1,580.00 /ea	1,580	-	-	3,560.00 /ea	3,560
Entry Pits, Creek Crossing, Station 383+97	1.00 ea	3,430.00 /ea	3,430.00 /ea	3,430	13,000.00 /ea	13,000	-		13,450.00 /ea	13,450	-	-	29,880.00 /ea	29,880
Receiving Pits, RR Crossing, Station 392+00	1.00 ea	450.00 /ea	450.00 /ea	450	1,530.00 /ea	1,530	-		1,580.00 /ea	1,580	-	-	3,560.00 /ea	3,560
Entry Pits, RR Crossing, Station 392+00	1.00 ea	3,430.00 /ea	3,430.00 /ea	3,430	13,000.00 /ea	13,000	-		13,450.00 /ea	13,450	-	-	29,880.00 /ea	29,880
Pipe Bore and Jack		*/lf*		*154,770*		*227,120*				*165,120*			*/lf*	*547,010*
2451.118 Sheetpiling														

Spreadsheet Level	Takeoff Quantity	Labor Cost/Unit	Labor Price	Labor Amount	Material Price	Material Amount	Sub Amount	Sub Name	Equip Price	Equip Amount	Other Price	Other Amount	Total Cost/Unit	Total Amount
2451.118 Sheetpiling														
Sheetpiling Left in Place, Station 320+00 to 336+00	40,000.00 sf	-	-	-	-	-	1,000,000		-	-	-	-	25.00 /sf	1,000,000
Sheetpiling Left in Place, Station 348+00 to 359+00	27,500.00 sf	-	-	-	-	-	687,500		-	-	-	-	25.00 /sf	687,500
Sheetpiling Left in Place, Station 368+00 to 380+00	30,000.00 sf	-	-	-	-	-	750,000		-	-	-	-	25.00 /sf	750,000
Sheetpiling		*/ls*					*2,437,500*						*/ls*	*2,437,500*
2502.014 Pipe Bedding														
Utility Bed Gravel-Crushed	24,890.00 cy	2.86 /cy	96.64 /cd	71,185	10.00 /cy	273,790	-		1.74 /cy	43,309	-	-	15.60 /cy	388,284
Pipe Bedding		*/cy*		*71,185*		*273,790*				*43,309*			*/cy*	*388,284*
2580.500 Utility Conflicts														
Utility Conflicts	2.00 ea	21,125.00 /ea	25.00 /mh	42,250	13,685.00 /ea	27,370	-		5,680.00 /ea	11,360	-	-	40,490.00 /ea	80,980
Utility Conflicts		*/ea*		*42,250*		*27,370*				*11,360*			*/ea*	*80,980*
2630.006 Catch Basin 6'														
8" Blow-Off Drainage System, 364+00	1.00 ea		/ch		/ea		54,000		/ch		-	-	54,000.00 /ea	54,000
8" Blow-Off Drainage System, 393+00	1.00 ea		/ch		/ea		108,000		/ch		-	-	108,000.00 /ea	108,000
Catch Basin 6'		*/ea*					*162,000*						*/ea*	*162,000*
2740.120 Asphalt Paving - SY														
Cold Laid Bituminous Base Course 3", Station 320+00 to 336+00	2,489.00 sy	-	-	-	-	-	15,482		-	-	-	-	6.22 /sy	15,482
Cold Laid Bituminous Base Course 3", Station 348+00 to 359+00	1,711.00 sy	-	-	-	-	-	10,642		-	-	-	-	6.22 /sy	10,642
Cold Laid Bituminous Base Course 3", Station 368+00 to 380+00	1,867.00 sy	-	-	-	-	-	11,613		-	-	-	-	6.22 /sy	11,613
Compacted Base 12", 8000 LF by 24'	21,330.00 sy	-	-	-	-	-	446,437		-	-	-	-	20.93 /sy	446,437
Compacted Base 4", Temporary Road	6,067.00 sy	-	-	-	-	-	27,908		-	-	-	-	4.60 /sy	27,908
Bituminous Top Course 6", 8000 LF by 24'	21,330.00 sy	0.76 /sy	0.76 /sy	16,211	8.45 /sy	180,239			0.55 /sy	11,732	-	-	9.76 /sy	208,181
Wear Course 1 1/2", 8000 LF by 24'	21,330.00 sy	0.35 /sy	0.35 /sy	7,466	2.41 /sy	51,405			0.25 /sy	5,333	-	-	3.01 /sy	64,203
Asphalt Paving - SY		*/sy*		*23,676*		*231,644*	*512,082*			*17,064*			*/sy*	*784,466*
2950.000 SITE RESTORATION														
Restore Landscaping	380.00 msf	30.00 /msf	30.00 /msf	11,400	50.00 /msf	19,000	-		20.00 /msf	7,600	-	-	100.00 /msf	38,000
SITE RESTORATION		*/msf*		*11,400*		*19,000*				*7,600*			*/msf*	*38,000*
15060.200 Pipe Support														
Pipe Support System at Canal Crossing	1.00 ea	2,500.00 /ea	2,500.00 /ea	2,500	16,500.00 /ea	16,500	-		1,500.00 /ea	***1,500***	-	-	20,500.00 /ea	20,500
Pipe Support		*/ea*		*2,500*		*16,500*				*1,500*			*/ea*	*20,500*
15230.301 XH Pipe PE														
84" Steel Pipe, 350 psi, Mortar Lined & Coated	15,808.00 lf	27.50 /lf	16.78 /mh	434,721	521.00 /lf	8,235,968	-		12.00 /lf	189,696	-	-	560.50 /lf	8,860,385

Spreadsheet Level	Takeoff Quantity	Labor Cost/Unit	Labor Price	Labor Amount	Material Price	Material Amount	Sub Amount	Sub Name	Equip Price	Equip Amount	Other Price	Other Amount	Total Cost/Unit	Total Amount
15230.301 XH Pipe PE														
Welding per Joint - 84"	348.00 ea	6,351.00 /ea	6,351.00 /ea	2,210,148	175.00 /ea	60,900	-		140.00 /ea	48,720	-	-	6,666.00 /ea	2,319,768
XH Pipe PE		*/lf*		*2,644,869*		*8,296,668*				*238,416*			*/lf*	*11,180,153*
15230.314 Pipe Fittings														
84" Pipe Fittings	16.00 ea	1,050.00 /ea	16.78 /mh	16,800	20,300.00 /ea	324,800	-		175.00 /ea	2,800	-	-	21,525.00 /ea	344,400
Pipe Fittings		*/ea*		*16,800*		*324,800*				*2,800*			*/ea*	*344,400*
15230.340 Turn Outs, Drains, Air Re														
Drain Vault, 6"	2.00 ea	9,039.00 /ea	9,039.00 /ea	18,078	15,007.00 /ea	30,014	-		2,080.00 /ea	4,160	-	-	26,126.00 /ea	52,252
Air Release Vault, 2"	3.00 ea	2,937.00 /ea	2,937.00 /ea	8,811	6,298.00 /ea	18,894	-		479.00 /ea	1,437	-	-	9,714.00 /ea	29,142
Air Vacuum/Air Release Vault, 14"	2.00 ea	5,078.00 /ea	5,078.00 /ea	10,156	31,975.00 /ea	63,950	-		757.00 /ea	1,514	-	-	37,810.00 /ea	75,620
Turn Outs, Drains, Air Re		*/ea*		*37,045*		*112,858*				*7,111*			*/ea*	*157,014*
16151.110 Cathodic Protection														
Cathodic Protection, Impressed Current	15,808.00 lf		/mh		/lf		15,808		-	-	-	-	1.00 /lf	15,808
Joint Seal	348.00 ea		/mh		/ea		43,500		-	-	-	-	125.00 /ea	43,500
Joint Bond	348.00 ea		/mh		/ea		20,880		-	-	-	-	60.00 /ea	20,880
Test Station at 1000 LF	16.00 ea		/mh		/ea		6,400		-	-	-	-	400.00 /ea	6,400
Insulating Flange Kits	1.00 ea		/mh		/ea		800		-	-	-	-	800.00 /ea	800
PCR Kits	1.00 ea		/mh		/ea		2,000		-	-	-	-	2,000.00 /ea	2,000
Cathodic Protection		*/lf*					*89,388*						*/lf*	*89,388*
403 Station 310+00 to 468+08				**3,583,114**		**10,109,151**	**3,200,970**			**1,260,473**				**18,153,707**
9000 Spanish Fork Canyon Pipeline Alt 2	*9,756,891*			*22,623,741*		*6,724,771*				*3,112,911*		*399,500*		*42,617,814*

Partial Totals

Labor	9,756,891		185,307.162	hrs	
Material	22,623,741				
Subcontract	6,724,771				
Equipment	3,112,911		28,483.400	hrs	
Other	399,500				
	42,617,814	42,617,814			
GC's Labor Burden	445,840		32.000 %		C
Trade Labor Burden	2,341,819		28.000 %		C
Total w/Labor Burden	**2,787,659**	**45,405,473**			
Material Sales Tax	1,696,781		7.500 %		C
Subcontractor Bond	134,495		2.000 %		C
Equipment Fuel & Maintenance	747,099		24.000 %		C
Other Mark-up	27,965		7.000 %		C
Total Construction Value	**2,606,340**	**48,011,813**			
Profit	4,691,905		7.430 %		T
Contingency	9,602,363		20.000 %		T
Total Project w/o Ins/Bonds	**14,294,268**	**62,306,081**			
Builder's Risk Insurance	196,391		0.311 %		T
General Liability Insurance	315,741		0.500 %		T
Performance & Payment Bond	329,907				B
Project Total	**842,039**	**63,148,120**			
	Partial Total	*63,148,120*			

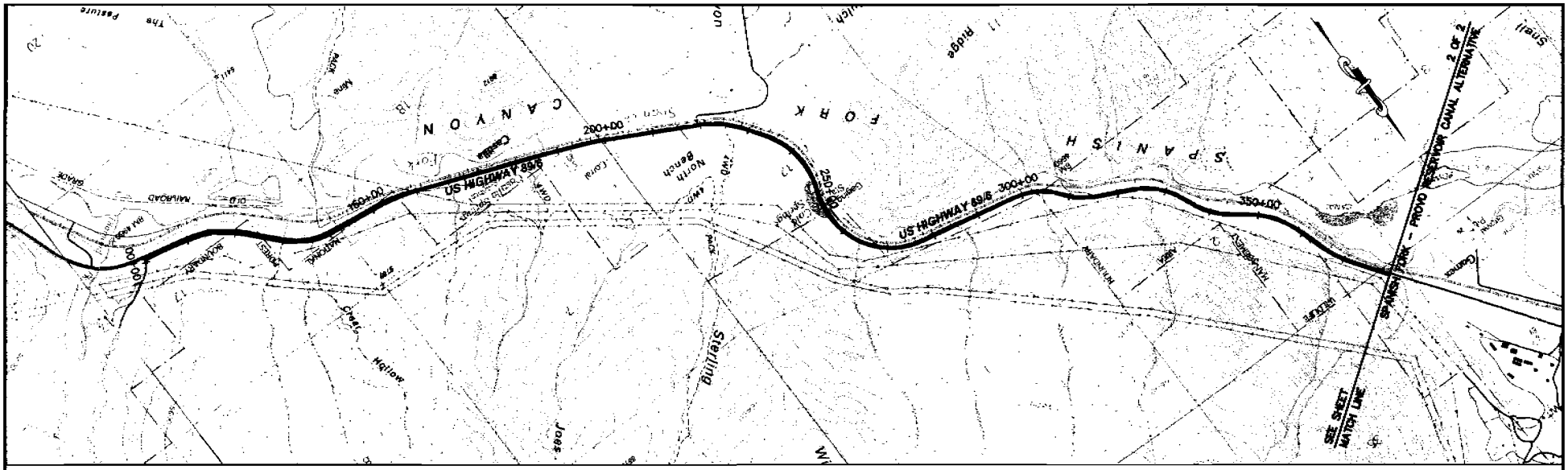

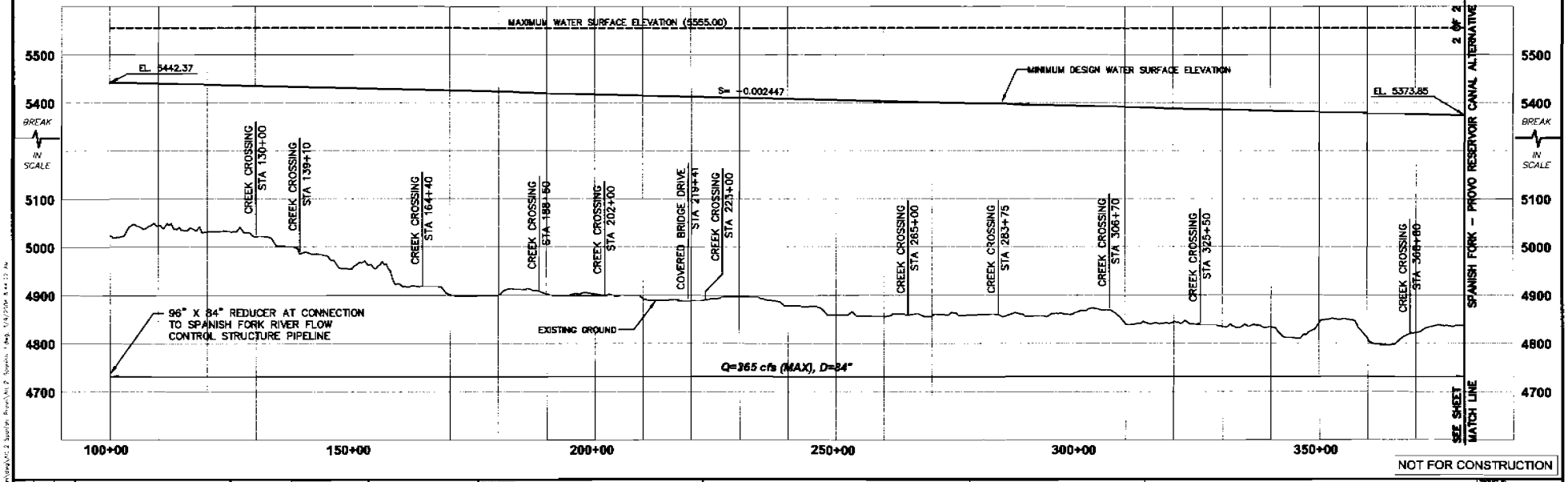

NOT FOR CONSTRUCTION

REV	DATE	BY	DESCRIPTION

SCALE: HORZ. 1" = 1000' VERT. 1" = 100'

WARNING 0 1/2 1 IF THIS BAR DOES NOT MEASURE 1" THEN DRAWING IS NOT TO SCALE

DESIGNED
DRAWN
CHECKED

SUBMITTED
(PROJECT MANAGER'S NAME) R. C. E. NO. DATE
(COMPANY OFFICER'S NAME) R. C. E. NO. DATE

MWH
MONTGOMERY WATSON HARZA

CUP

CENTRAL UTAH WATER CONSERVANCY DISTRICT
SPANISH FORK – PROVO RESERVOIR CANAL ALTERNATIVE
SPANISH FORK CANYON PIPELINE PLAN AND PROFILE
STA 100+00 TO STA 380+00

DRAWING NO. X
DATE FEBRUARY 2004
JOB NO. ALT 2-SPAN SH-1
SHEET NO. 1 of 2

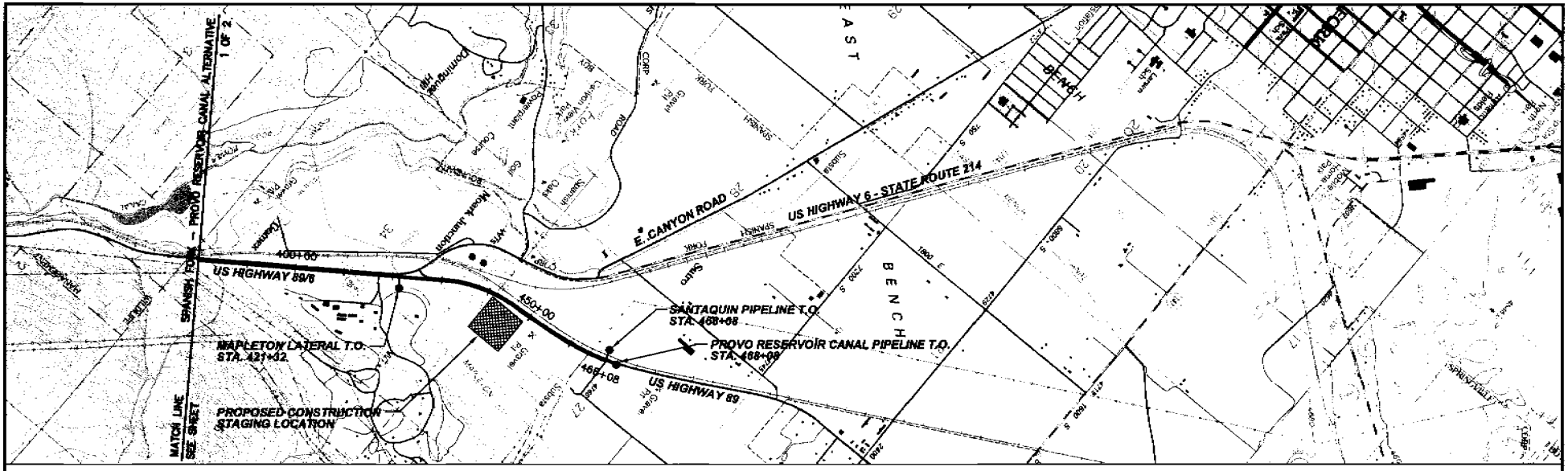

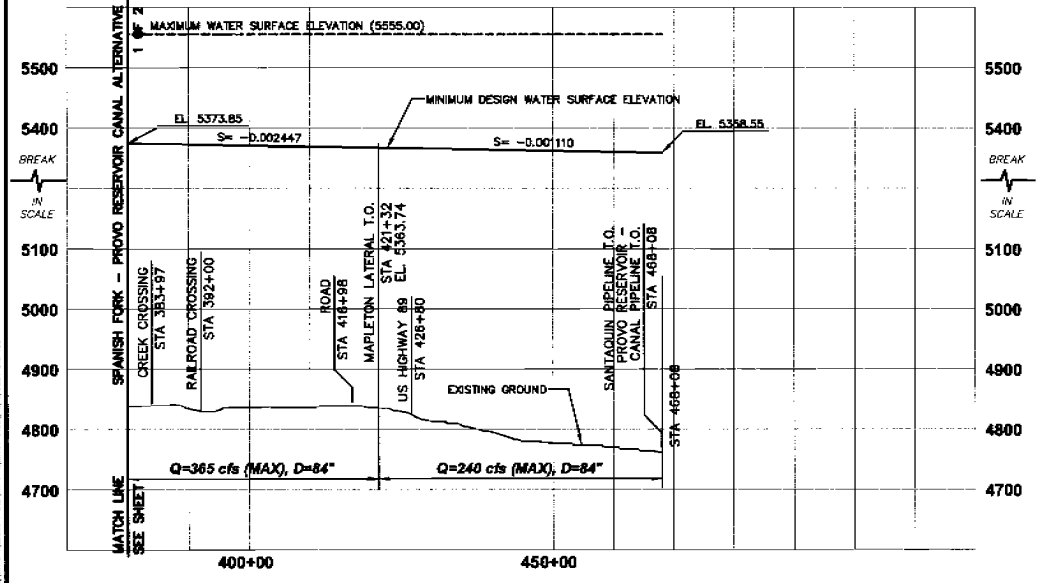

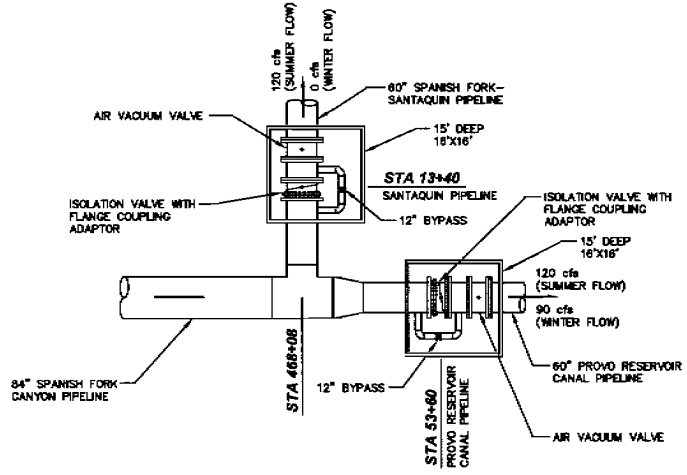

NOT FOR CONSTRUCTION

REV	DATE	BY	DESCRIPTION

SCALE: HORIZ. 1" = 1000' VERT. 1" = 100'

WARNING: 0 1/2 1 — IF THIS BAR DOES NOT MEASURE 1" THEN DRAWING IS NOT TO SCALE.

DESIGNED
DRAWN
CHECKED

SUBMITTED
(PROJECT MANAGER'S NAME) R. C. E. NO. DATE
(COMPANY OFFICER'S NAME) R. C. E. NO. DATE

MWH
MONTGOMERY WATSON HARZA

CENTRAL UTAH WATER CONSERVANCY DISTRICT
SPANISH FORK – PROVO RESERVOIR CANAL ALTERNATIVE
SPANISH FORK CANYON PIPELINE PLAN AND PROFILE
STA 380+00 TO STA 468+08

CONTRACT NO. X
DATE FEBRUARY 2004
DRAWING NO. ALT 2-SPANISH-2
SHEET NO. 2 of 2

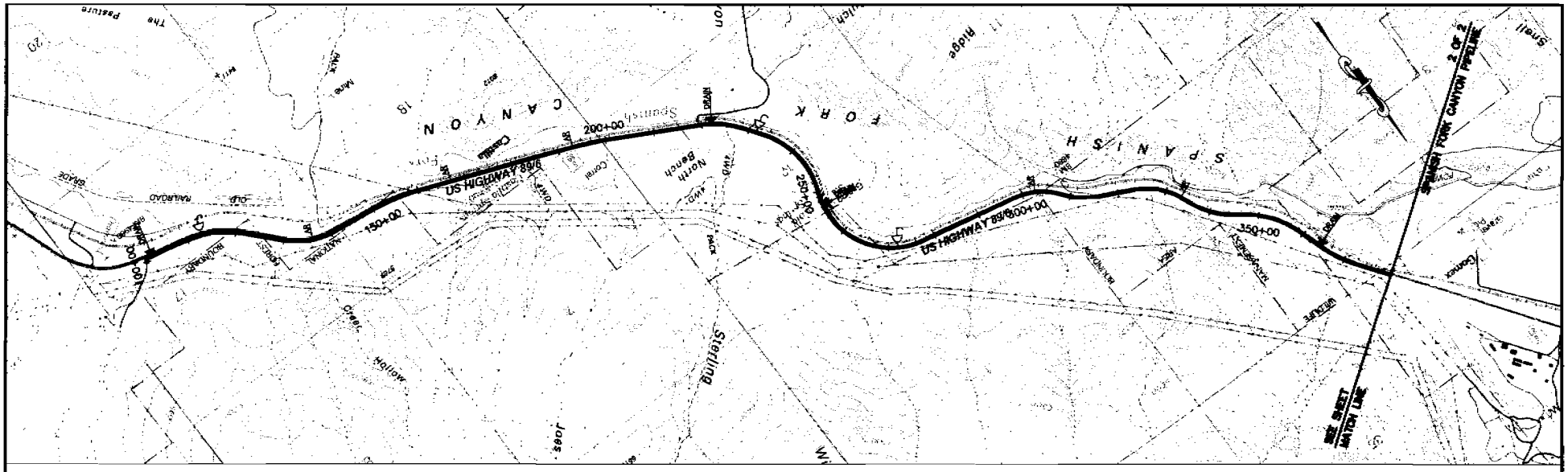

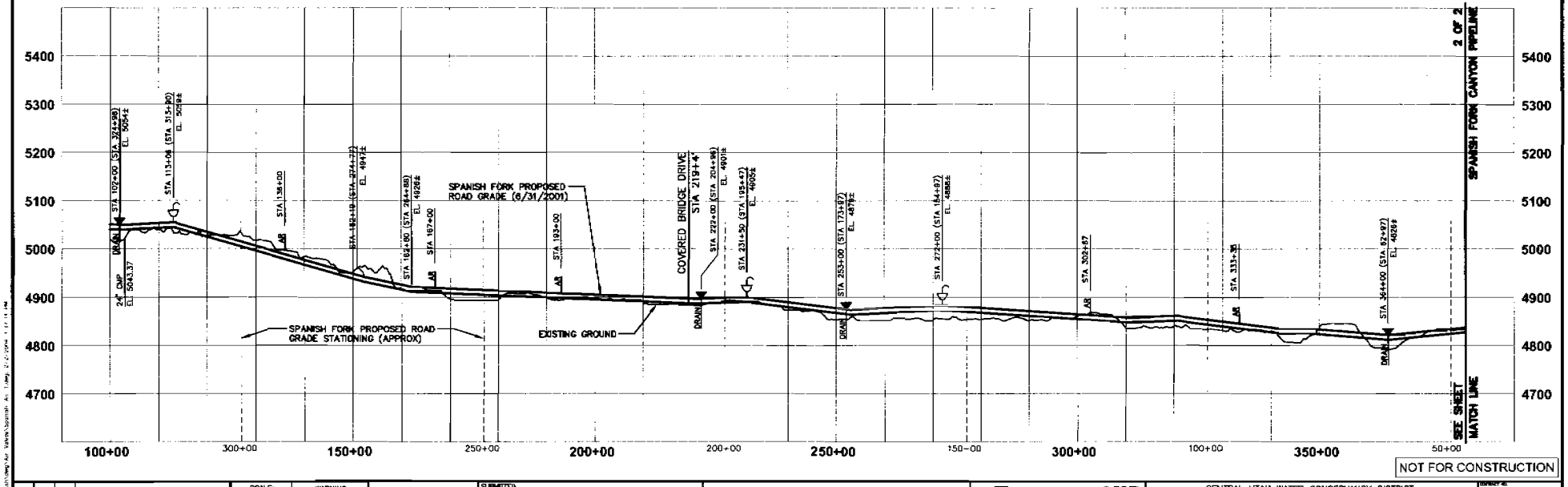

NOT FOR CONSTRUCTION

REV	DATE	BY	DESCRIPTION

SCALE: HORZ: 1" = 1000' VERT. 1" = 100'

WARNING: IF THIS BAR DOES NOT MEASURE 1" THEN DRAWING IS NOT TO SCALE.

DESIGNED
DRAWN
CHECKED

SUBMITTED
(PROJECT MANAGER'S NAME) R. C. E. NO. DATE
(COMPANY OFFICER'S NAME) R. C. E. NO. DATE

MWH
MONTGOMERY WATSON HARZA

CUP

CENTRAL UTAH WATER CONSERVANCY DISTRICT
AIR RELEASE, VACUUM, and DRAIN VALVES FOR ULS PIPELINES - ALTERNATIVES 1,2,3
SPANISH FORK CANYON PIPELINE
STA 100+00 TO STA 380+00

CONTRACT NO. K
DATE JANUARY 2004
DRAWING NO. SPANISH-AIR-1
SHEET NO. 1 of 2

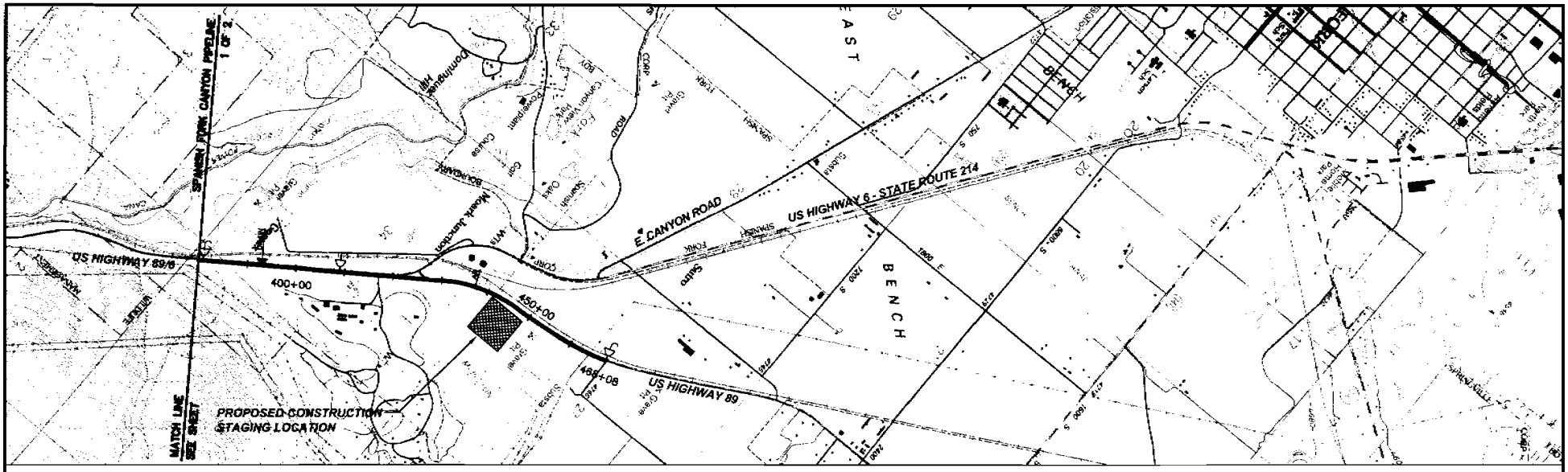

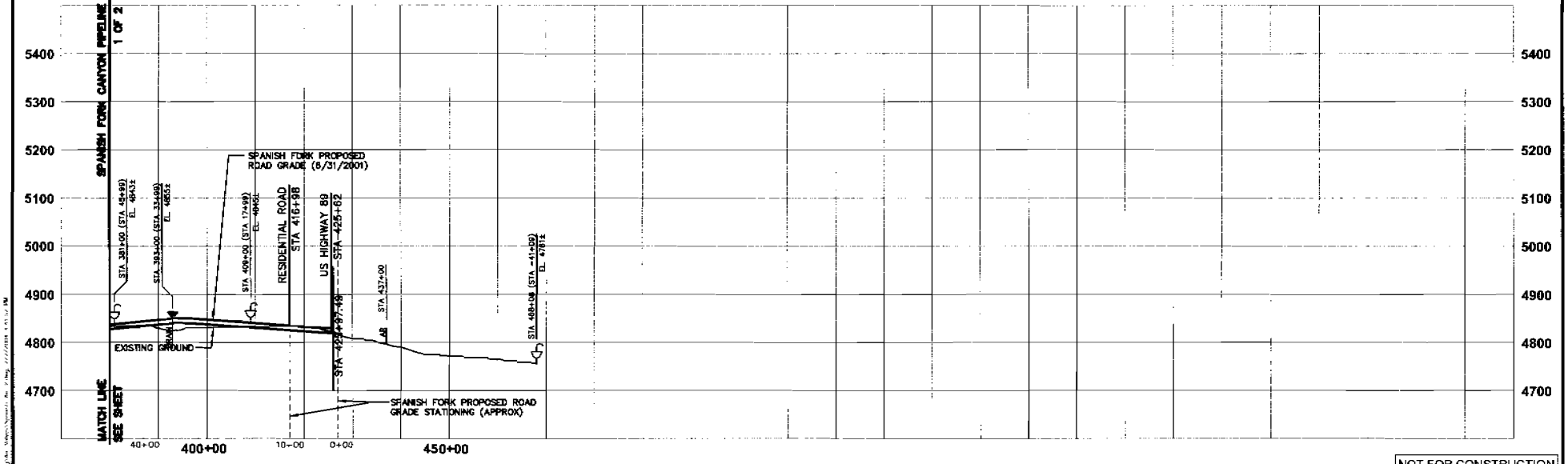

NOT FOR CONSTRUCTION

REV	DATE	BY	DESCRIPTION

SCALE: HORZ: 1" = 1000' VERT. 1" = 100'

WARNING: 0 1/2 1 — IF THIS BAR DOES NOT MEASURE 1" THEN DRAWING IS NOT TO SCALE.

DESIGNED
DRAWN
CHECKED

SUBMITTED

	R. C. E. NO.	DATE
(PROJECT MANAGER'S NAME)		
(COMPANY OFFICER'S NAME)		

MWH
MONTGOMERY WATSON HARZA

CUP

CENTRAL UTAH WATER CONSERVANCY DISTRICT
AIR RELEASE, VACUUM, and DRAIN VALVES FOR ULS PIPELINES - ALTERNATIVES 1,2,3
SPANISH FORK CANYON PIPELINE
STA 350+00 TO STA 468+08

JANUARY 2004
SPANISH-AIR-2
2 of 2

TABLE VIII-13

Spanish Fork Canyon Pipeline

Station	Air Vacuum Valve		Air Release Valves		Blow-Off Drain Valves	
	Valve Size	Pressure Class	Valve Size	Pressure Class	Valve Size	Pressure Class
102+00					10	250
113+06	14	250	2	250		
136+00			2	250		
167+00			2	300		
193+00			2	300		
221+00					8*	300
231+50	14	300	2	300		
253+00					8	300
272+00	14	300	2	300		
302+67			2	300		
333+35			2	350		
364+00					6	350
381+00	14	350	2	350		
393+00					6	350
409+00	14	350	2	350		
437+00			2	350		
468+08			2	350		

* Singer Model 106-AC valve (anti-cavitation)

(Alternative 2) Crossing Tables for ULS

Table 8 - 5
Highway and Interstate Pipeline Crossings

Feature Name	Approximate Pipeline Station	Highway or Interstate	Crossing Technique
Spanish Fork – Santaquin Pipeline	13+21	US Highway 89	Jack/bore
Spanish Fork – Santaquin Pipeline	38+00	U.S. Highway 6	Jack/bore
Spanish Fork – Santaquin Pipeline	710+00	U.S. Highway 6/State Route 198	Jack/bore
Spanish Fork – Santaquin Pipeline	742+00	Interstate 15	Jack/bore
Spanish Fork – Santaquin Pipeline	882+00	U.S. Highway 6	Jack/bore
Spanish Fork – Provo Reservoir Canal Pipeline	945+00	U.S. Highway 189	Jack/bore
Spanish Fork – Provo Reservoir Canal Pipeline	1014+00	State Route 52	Jack/bore

Table 8-6
Railroad Crossings

Pipeline	Approximate Pipeline Station	Crossing Technique
Spanish Fork – Santaquin Pipeline	14+00	Jack/bore
Spanish Fork – Santaquin Pipeline	38+00	Jack/bore
Spanish Fork – Santaquin Pipeline	938+00	Jack/bore
Spanish Fork Canyon Pipeline	392+00	Jack/bore

Table 8-7
Stream, River and Canal Pipeline Crossings

Pipeline Name	Approximate Pipeline Station	Water Feature	Crossing Technique
Spanish Fork Canyon Pipeline	131+50	Creek	Jack/bore
Spanish Fork Canyon Pipeline	139+10	Creek	Jack/bore
Spanish Fork Canyon Pipeline	164+40	Creek	Jack/bore
Spanish Fork Canyon Pipeline	188+50	Creek	Jack/bore
Spanish Fork Canyon Pipeline	206+00	Creek	Jack/bore
Spanish Fork Canyon Pipeline	223+00	Creek	Jack/bore
Spanish Fork Canyon Pipeline	265+00	Creek	Jack/bore

Table 8-7
Stream, River and Canal Pipeline Crossings

Pipeline Name	Approximate Pipeline Station	Water Feature	Crossing Technique
Spanish Fork Canyon Pipeline	283+75	Creek	Jack/bore
Spanish Fork Canyon Pipeline	306+70	Creek	Jack/bore
Spanish Fork Canyon Pipeline	325+50	Creek	Jack/bore
Spanish Fork Canyon Pipeline	365+50	Creek	Jack/bore
Spanish Fork Canyon Pipeline	383+97	Creek	Jack/bore
Spanish Fork Canyon Pipeline	422+00	Mapleton Lateral Canal	
Spanish Fork – Santaquin Pipeline	98+00	Mill Race Canal	Jack/bore or Micro-tunnel
Spanish Fork – Santaquin Pipeline	100+00	Spanish Fork River	Jack/bore or Micro-tunnel
Spanish Fork – Santaquin Pipeline	103+00	South Field Canal	Jack/bore
Spanish Fork – Santaquin Pipeline	143+00	Salem Canal	Jack/bore
Spanish Fork – Santaquin Pipeline	242+00	Salem Canal	Jack/bore
Spanish Fork – Santaquin Pipeline	501+00	Strawberry Highline Canal	Jack/bore
Spanish Fork – Santaquin Pipeline	516+00	Strawberry Highline Canal	Jack/bore
Spanish Fork – Santaquin Pipeline	578+00	Irrigation Canal	open cut
Spanish Fork – Santaquin Pipeline	592+00	Irrigation Canal	open cut
Spanish Fork – Santaquin Pipeline	627+00	Irrigation Canal	open cut
Spanish Fork – Santaquin Pipeline	630+00	Strawberry Highline Canal	Jack/bore
Spanish Fork – Santaquin Pipeline	686+00	Irrigation Canal	open cut
Spanish Fork – Santaquin Pipeline	691+00	Spring Creek	Jack/bore
Spanish Fork – Santaquin Pipeline	800+00	Strawberry Highline Canal	Jack/bore
Spanish Fork – Santaquin Pipeline	880+00	drainage channel	open cut
Santaquin – Mona Reservoir Pipeline	344+00	Inlet to Mona Reservoir	Jack/bore
Spanish Fork – Provo Reservoir Canal/Pipeline	313+00	Hobble Creek	Jack/bore
Spanish Fork – Provo Reservoir Canal/Pipeline	357+00	Spring Creek	Jack/bore
Spanish Fork – Provo Reservoir Canal/Pipeline	678+00	Upper Union Canal	Open cut
Spanish Fork – Provo Reservoir	768+00	Rock Canyon	Open cut

(Alternative 2) Crossing Tables for ULS

Table 8-7 Stream, River and Canal Pipeline Crossings			
Pipeline Name	**Approximate Pipeline Station**	**Water Feature**	**Crossing Technique**
Canal/Pipeline			
Spanish Fork – Provo Reservoir Canal/Pipeline	941+00	Timpanogos Canal	Jack/bore
Spanish Fork – Provo Reservoir Canal/Pipeline	987+00	Provo River	Micro-tunnel
Spanish Fork – Provo Reservoir Canal/Pipeline	1003+00	Union Canal	Jack/bore
Spanish Fork – Provo Reservoir Canal/Pipeline	1010+00	Bench Canal	Jack/bore
Spanish Fork – Provo Reservoir Canal/Pipeline	1013+00	Provo Reservoir Canal	Jack/bore

TABLE VIII-16
Discharge and Drain Locations for Spanish Fork Canyon

Station	Drain Size (inch)	Disturbance area			Length of Road Cut (ft)	Discharge Feature			Discharge (cfs)	Remarks
		Width (ft)	Length (ft)	Area (sf)		Natural Drainage	Storm Drain	Pumped to Surface		
Spanish Fork Canyon										
102+00	8	40	300	12,000	NA		x		2.0 to 4.0	connect to diamond fork discharge
222+00	8	50	50	2,500	60	x			2.0 to 4.0	Plus RR crossing of 60 feet
253+00	8	50	25	1,250	30	x			2.0 to 5.0	Plus RR crossing of 60 feet
364+00	6	50	40	2,000	60	x			2.0 to 5.0	Plus RR crossing of 60 feet
393+00	6	50	1100	55,000	NA	x			1.0 to 2.5	Plus RR crossing of 60 feet

P:\MWH\Central Utah\dwg\Tech Memo 3-B\Sheets\Figures\Fig-3-B-4.dwg, 1/21/2004 3:22:36 PM

SCALE: N/A

MWH
MONTGOMERY WATSON HARZA

CUP

CENTRAL UTAH WATER CONSERVANCY DISTRICT

TYPICAL DETAIL

BLOW-OFF DRAIN

FIGURE III-B-4

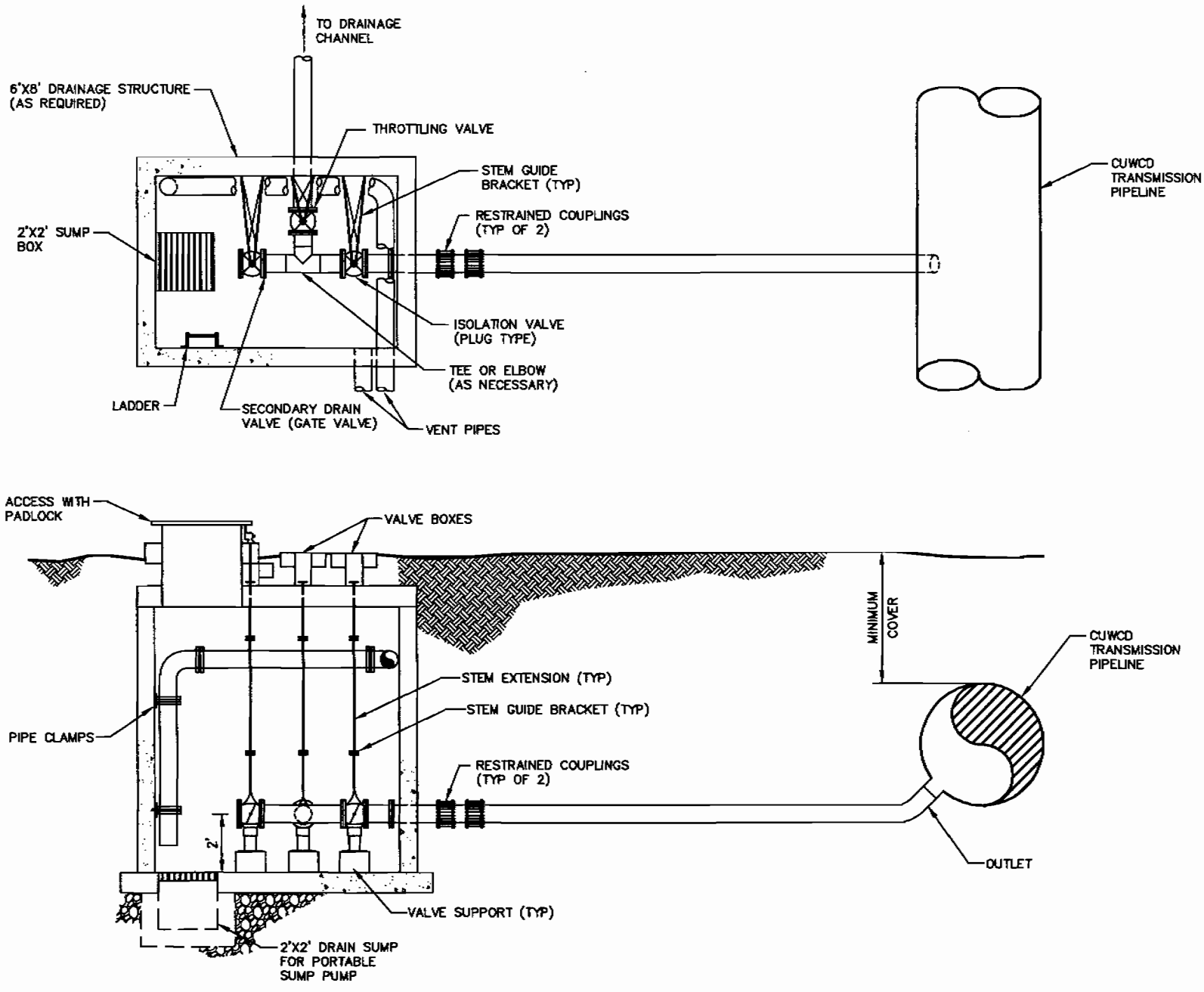

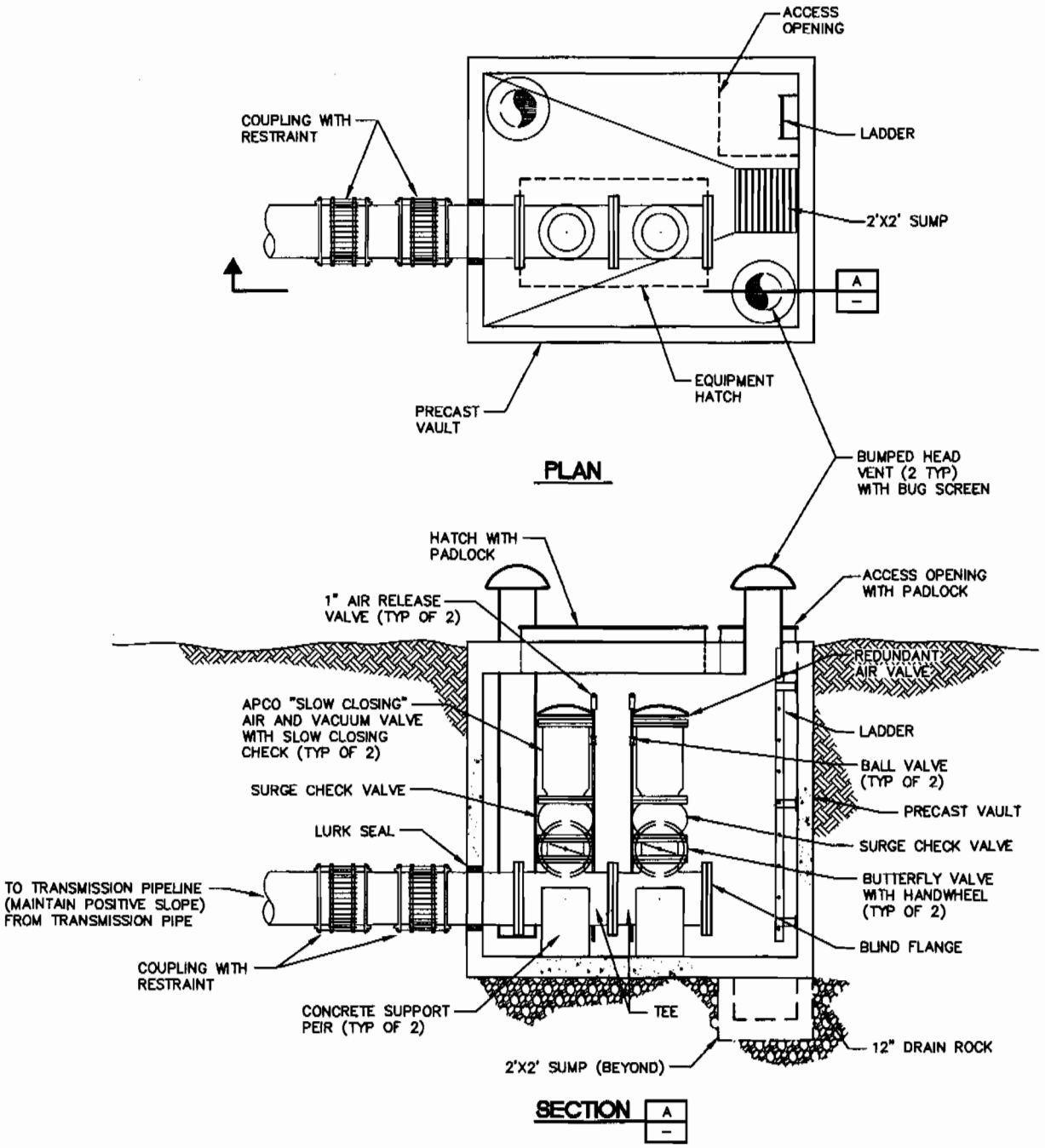

AIR VACUUM/AIR RELEASE VAULT

(6" TO 12" VALVES)

SCALE: N/A	MWH MONTGOMERY WATSON HARZA	CUP	CENTRAL UTAH WATER CONSERVANCY DISTRICT TYPICAL DETAIL AIR VACUUM/AIR RELEASE VAULT FIGURE III-B-5

P:\MWH\Central Utah\Drawg\Tech Memo 3-B\Sheets\Figures\Fig-3-B-5.dwg, 1/27/2004 9:41:15 PM

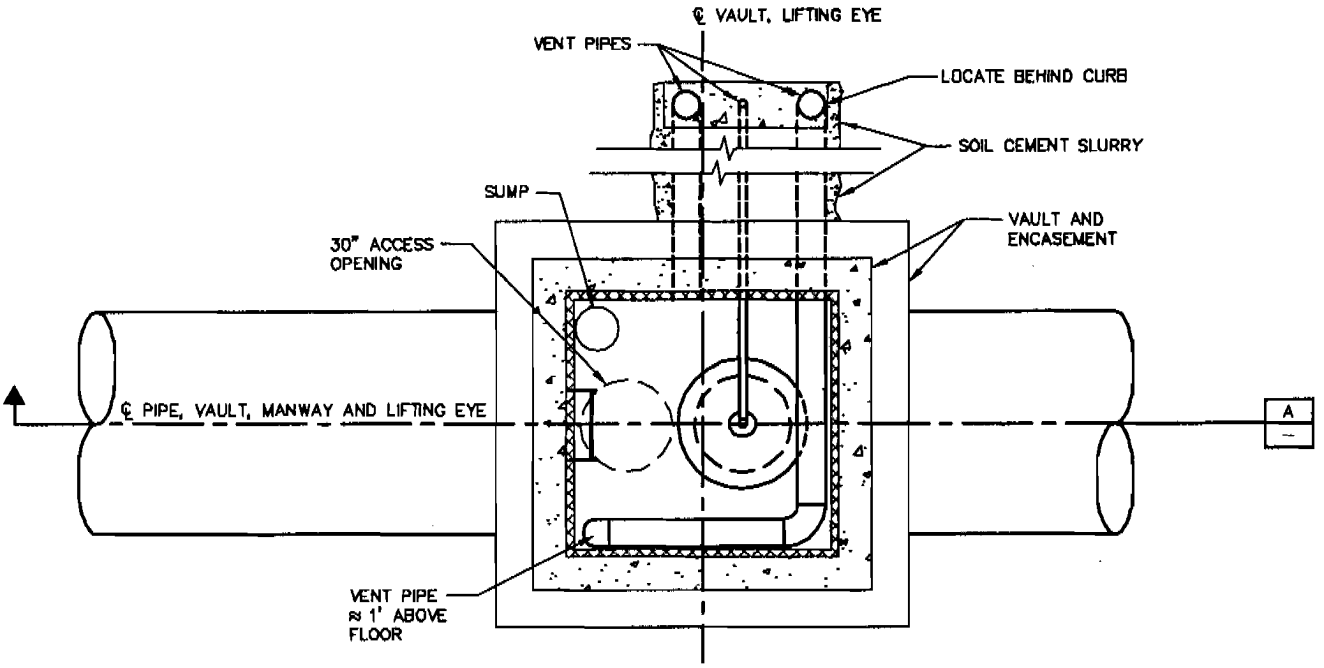

PLAN

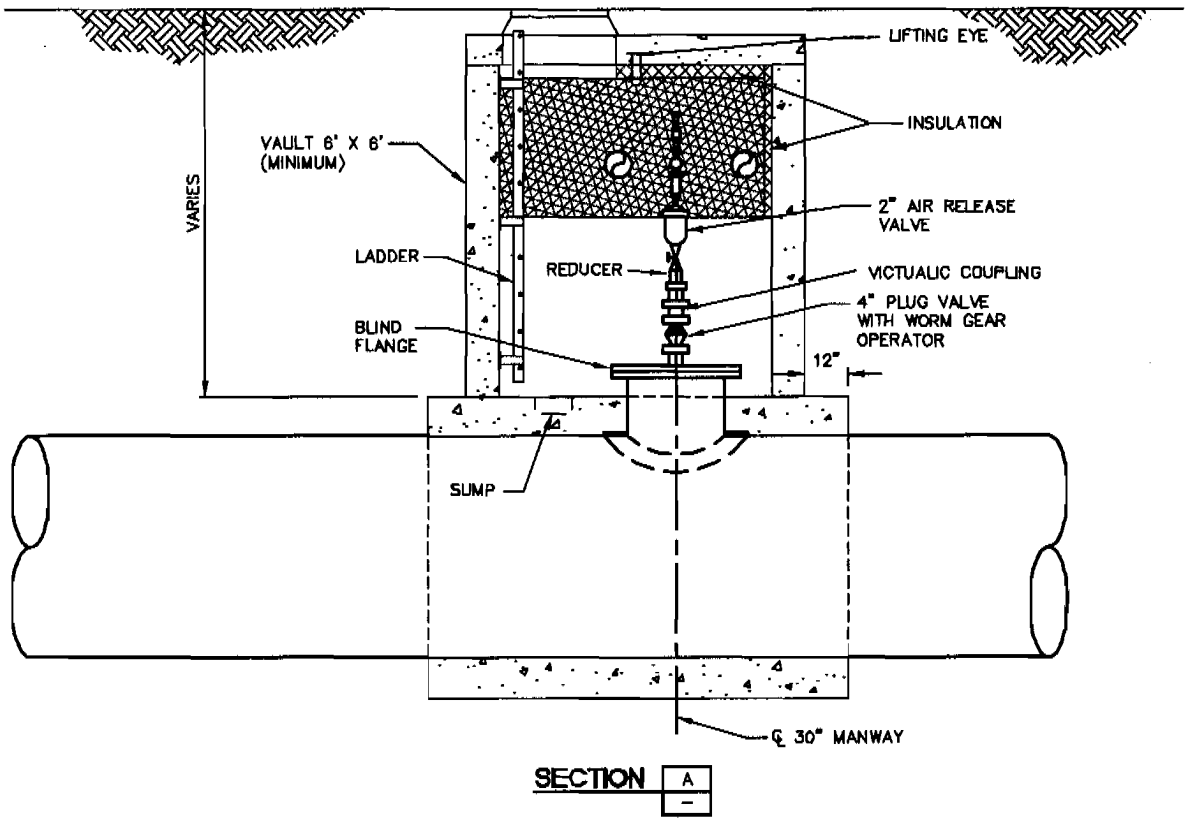

SECTION A

AIR RELEASE VAULT

SCALE:			
N/A	MWH MONTGOMERY WATSON HARZA	CUP	CENTRAL UTAH WATER CONSERVANCY DISTRICT TYPICAL DETAIL AIR RELEASE VAULT FIGURE II-B-6

P:\MWH\Central Utah\dwg\Figures\Fig-3-B-6.dwg, 11/20/2003 11:51:38 AM

Central Utah Project Completion Program

Spanish Fork - Santaquin Pipeline

October 2004

UTAH RECLAMATION
MITIGATION
AND CONSERVATION
COMMISSION

TABLE VIII-4
SUMMARY SHEET
FOR
SPANISH FORK-SANTAQUIN PIPELINE

	LABOR	MATERIAL	SUB AMOUNT	EQUIPMENT	OTHER	TOTAL	TOTAL w/Markups*
General Conditions	$2,576,880	$298,470	$10,020	$173,300	$140,000	$3,198,670	$4,819,540.19
Easement Costs	$0	$0	$0	$0	$1,157,450	$1,157,450	$1,743,968
Traffic Control	$505,440	$0	$0	$23,400	$0	$528,840	$796,820
Pipeline Costs	$11,237,617	$23,109,156	$0	$3,490,494	$0	$37,837,267	$57,010,642
Dewatering	$600,240	$258,300	$0	$0	$0	$858,540	$1,293,590
Erosion Control	$30,576	$556,849	$0	$0	$0	$587,425	$885,092
Utility work	$994,458	$758,065	$0	$266,185	$0	$2,018,708	$3,041,653
Road Restoration & Street Improvements	$89,980	$457,064	$4,509,511	$33,012	$0	$5,089,567	$7,668,616
Landscaping	$30,780	$51,300	$0	$20,520	$0	$102,600	$154,591
60-inch Iso. Valve	$0	$0	$113,200	$0	$0	$113,200	$170,562
Misc. Valves	$483,004	$2,216,889	$422,770	$105,209	$0	$3,227,872	$4,863,540
Cathodic Protection	$0	$0	$523,770	$0	$0	$523,770	$789,181
Jack & Bore	$488,340	$719,360	$357,500	$545,360	$0	$2,110,560	$3,180,049
Total	**$17,037,312**	**$28,425,450**	**$5,936,769**	**$4,657,480**	**$1,297,450**	**$57,354,461**	**$86,417,833**

* Mark-ups - see Preliminary Design Cost Estimate and Schedule for list of cost markups

Assumptions:

General Assumption - Assumed that excavations through Spanish Fork, Salem, Payson, Santaquin Cities would require pipeline to be installed at depth of 4 to 10 feet of cover.

General Conditions - Includes permits, testing and inspection, QA/QC plans, field office equipment and personnel, and mobilization/demobilization

Easement Costs - Include property acquisition costs, title search, appraisals, etc.

Traffic Control - Includes flaggers, traffic control plan, etc.

Pipeline Costs - Includes excavation, backfill/compaction,60/54/48/42/36-inch pipes, welded joints

Utility work - Includes relocation or temporary service for waterlines, gas lines, telephone. Also includes reconnection of water service, gas service, telephone service lines

Road Restoration - includes asphalt restoration (6-inch asphalt, 12-inch base course) for State Roads with plant mix seal coats (4-inch asphalt, 12-inch base course) for City Roads.

Miscellaneous Valves - Air Vacuum/Air Release Valve Structures, Air Release Structures, Drain Valves including drain lines to discharge locations.

Street Improvements - Assumed that only one side of road would require curb & gutter, sidewalk, and driveways would be replaced

Spreadsheet Level	Takeoff Quantity	Labor Cost/Unit	Labor Price	Labor Amount	Material Price	Material Amount	Sub Amount	Sub Name	Equip Price	Equip Amount	Other Price	Other Amount	Total Cost/Unit	Total Amount
10000 Spanish Fork Santaquin Pipeline Alt 2														
01 General Conditions				5,181,570		428,631	13,839			314,935		1,856,774		7,795,849
1001 Station 13+21 to 33+00				695,597		1,227,384	187,251			278,308				2,388,540
1002 Station 33+00 to 80+00				1,365,951		2,855,664	572,785			481,919				5,275,670
1003 Station 80+00 to 104+00				715,340		1,138,339	527,288			223,977				2,604,935
1004 Station 104+00 to 123+00				502,977		832,000	197,589			130,783				1,663,428
1005 Station 123+00 to 354+54				5,820,047		10,326,052	2,659,317			1,685,704				19,891,121
1006 Station 354+54 to 496+00				3,241,547		5,672,171	1,374,414			921,916				11,210,048
1007 Station 496+00 to 520+00				531,721		972,987	28,205			282,934				1,815,847
1008 Station 520+00 to 562+00				1,141,457		1,893,694	562,017			322,617				3,919,595
1009 Station 562+00 to 594+00				895,145		1,301,784	388,574			245,730				2,831,234
1010 Station 594+00 to 752+00				3,899,520		6,607,605	1,563,952			1,259,035				13,330,212
1011 Station 752+00 to 790+80				937,788		1,801,578	479,144			285,578				3,304,085
1012 Station 790+80 to 858+00				1,414,356		2,961,926	72,566			444,586				4,893,435
1013 Station 858+00 to 876+00				325,531		617,933	82,079			194,300				1,109,842
1014 Station 876+00 to 932+75				1,150,641		1,963,882	91,477			394,899				3,666,899
1015 Station 932+75 to 938+26				183,633		426,758	18,666			79,842				682,892
10000 Spanish Fork Santaquin Pipeline Alt 2				*28,083,129*		*40,821,629*	*8,199,237*			*7,457,064*		*1,856,774*		*86,417,833*

Partial Totals

Labor	28,083,129		393,569.661	hrs
Material	40,821,629			
Subcontract	8,199,237			
Equipment	7,457,064		59,380.000	hrs
Other	1,856,774			
Project Total	86,417,833	86,417,833		
	Partial Total	***86,417,833***		

Spreadsheet Level	Takeoff Quantity	Labor Cost/Unit	Labor Price	Labor Amount	Material Price	Material Amount	Sub Amount	Sub Name	Equip Price	Equip Amount	Other Price	Other Amount	Total Cost/Unit	Total Amount
10000 Spanish Fork Santaquin Pipeline Alt 2														
01 General Conditions														
0060.000 Land Costs														
Permanent Easement Cost	1.00 ls	-	-	-	-	-	-		-	-	663,900.00 /ls	663,900	663,900.00 /ls	663,900
Temporary Easement Cost	1.00 ls	-	-	-	-	-	-		-	-	151,050.00 /ls	151,050	151,050.00 /ls	151,050
Easements, Appraisal/Negotiation	137.00 ea	-	-	-	-	-	-		-	-	2,500.00 /ea	342,500	2,500.00 /ea	342,500
Land Costs		*/ls*										*1,157,450*	*/ls*	*1,157,450*
1050.100 Permits														
Construction Permits	1.00 ls	-	-	-	/ls		-		-	-	50,000.00 /ls	50,000	50,000.00 /ls	50,000
Permits		*/ls*										*50,000*	*/ls*	*50,000*
1050.100 Documents														
QA/QC Plan	1.00 ls	11,250.00 /ls	11,250.00 /ls	11,250	2,500.00 /ls	2,500	-		-	-	-	-	13,750.00 /ls	13,750
Documents		*/ls*		*11,250*		*2,500*							*/ls*	*13,750*
1065.100 Start-Up & Commissioning														
Survey & Layouts	1.00 ls	42,000.00 /ls	42,000.00 /ls	42,000	5,000.00 /ls	5,000	-		12,000.00 /ls	12,000	-	-	59,000.00 /ls	59,000
Start-Up & Commissioning		*/ls*		*42,000*		*5,000*				*12,000*			*/ls*	*59,000*
1070.100 Photos														
Project Photos	36.00 mo	450.00 /mo	450.00 /mo	16,200	150.00 /mo	5,400	-		-	-	-	-	600.00 /mo	21,600
Photos		*/mo*		*16,200*		*5,400*							*/mo*	*21,600*
1075.100 Signs														
Project Signs 4x8	1.00 ea	150.00 /ea	150.00 /mh	150	250.00 /ea	250	-		-	-	-	-	400.00 /ea	400
Signs		*/ea*		*150*		*250*							*/ea*	*400*
1100.100 Project Management														
Construction Manager	44.00 wk	2,400.00 /wk	2,400.00 /wk	105,600	-	-	-		100.00 /wk	4,400	-	-	2,500.00 /wk	110,000
Project Engineer	156.00 wk	1,500.00 /wk	1,500.00 /wk	234,000	-	-	-		100.00 /wk	15,600	-	-	1,600.00 /wk	249,600
Purchasing Agent	18.00 wk	2,100.00 /wk	2,100.00 /wk	37,800	-	-	-		75.00 /wk	1,350	-	-	2,175.00 /wk	39,150
Senior Estimator	18.00 wk	1,500.00 /wk	1,500.00 /wk	27,000	-	-	-		75.00 /wk	1,350	-	-	1,575.00 /wk	28,350
Geotechnical Engineer	156.00 wk	1,600.00 /wk	1,600.00 /wk	249,600	-	-	-		75.00 /wk	11,700	-	-	1,675.00 /wk	261,300
Scheduling Engineer	156.00 wk	1,600.00 /wk	1,600.00 /wk	249,600	-	-	-		75.00 /wk	11,700	-	-	1,675.00 /wk	261,300
Project Management		*/wk*		*903,600*						*46,100*			*/wk*	*949,700*
1102.100 Site Supervision														
General Superintendent	156.00 wk	2,100.00 /wk	2,100.00 /wk	327,600	-	-	-		/wk		-	-	2,100.00 /wk	327,600
Civil Superintendent	156.00 wk	2,100.00 /wk	2,100.00 /wk	327,600	-	-	-		/wk		-	-	2,100.00 /wk	327,600
Assistant Superintendent	156.00 wk	1,500.00 /wk	1,500.00 /wk	234,000	-	-	-		/wk		-	-	1,500.00 /wk	234,000
Site Supervision		*/wk*		*889,200*									*/wk*	*889,200*
1106.100 Clerical Staff														
Project Secretary	156.00 wk	1,400.00 /wk	1,400.00 /wk	218,400	-	-	-		-	-	-	-	1,400.00 /wk	218,400
Time Keeper	156.00 wk	480.00 /wk	480.00 /wk	74,880	-	-	-		-	-	-	-	480.00 /wk	74,880
Clerical Staff		*/wk*		*293,280*									*/wk*	*293,280*
1110.100 Travel														
Weekly Auto Allowance	340.00 wk	-	-	-	75.00 /wk	25,500	-		-	-	-	-	75.00 /wk	25,500
Travel		*/wk*				*25,500*							*/wk*	*25,500*
1200.100 Security														
Watchman	156.00 wk	1,200.00 /wk	1,200.00 /wk	187,200	-	-	5,460		-	-	-	-	1,235.00 /wk	192,660
Conc Jersey Barriers	500.00 lf	-	-	-	8.00 /lf	4,000	-		-	-	-	-	8.00 /lf	4,000

Spreadsheet Level	Takeoff Quantity	Labor Cost/Unit	Labor Price	Labor Amount	Material Price	Material Amount	Sub Amount	Sub Name	Equip Price	Equip Amount	Other Price	Other Amount	Total Cost/Unit	Total Amount
Security		/ls		*187,200*		*4,000*	*5,460*						/ls	*196,660*
1250.100 Offices														
Office Trailer	36.00 mo	-	-	-	-	-	-		1,150.00 /mo	41,400	-	-	1,150.00 /mo	41,400
Offices		/ls								*41,400*			/ls	*41,400*
1255.100 Supplies & Equip														
Copy Machine	36.00 mo	-	-	-	550.00 /mo	19,800	-		-	-	-	-	550.00 /mo	19,800
Personal Computer	108.00 mo	-	-	-	200.00 /mo	21,600	-		-	-	-	-	200.00 /mo	21,600
Software Licenses	108.00 mo	-	-	-	75.00 /mo	8,100	-		-	-	-	-	75.00 /mo	8,100
Desks & Chairs	108.00 mo	-	-	-	5.00 /mo	540	-		-	-	-	-	5.00 /mo	540
File Cabinets	36.00 mo	-	-	-	5.00 /mo	180	-		-	-	-	-	5.00 /mo	180
Postage & Courier Services	36.00 mo	-	-	-	200.00 /mo	7,200	-		-	-	-	-	200.00 /mo	7,200
Fax Machine & Line	36.00 mo	-	-	-	150.00 /mo	5,400	-		-	-	-	-	150.00 /mo	5,400
Office Supplies & Equipment	36.00 mo	-	-	-	150.00 /mo	5,400	-		-	-	-	-	150.00 /mo	5,400
Supplies & Equip		/ls				*69,220*							/ls	*69,220*
1260.100 Utilities														
Electric Power	36.00 mo	-	-	-	700.00 /mo	25,200	-		-	-	-	-	700.00 /mo	25,200
Telephone Charges	36.00 mo	-	-	-	750.00 /mo	27,000	-		-	-	-	-	750.00 /mo	27,000
Temporary Toilets	36.00 mo	-	-	-	150.00 /mo	5,400	-		-	-	-	-	150.00 /mo	5,400
Utilities		/ls				*57,600*							/ls	*57,600*
1270.100 OSHA & Safety														
Safety Officer	156.00 wk	1,500.00 /wk	20.00 /mh	234,000	-	-	-		-	-	-	-	1,500.00 /wk	234,000
First Aid	1.00 ls		/ls		120,000.00 /ls	120,000	-		/ls		-	-	120,000.00 /ls	120,000
OSHA & Safety		/ls		*234,000*		*120,000*							/ls	*354,000*
1300.100 Allowances														
Office Furniture - Allowance	1.00 ls		/ls		10,000.00 /ls	10,000			-	-	-	-	10,000.00 /ls	10,000
Traffic Control, 3 each Flaggers	468.00 wk	1,080.00 /wk	1,080.00 /wk	505,440	/wk		-		50.00 /wk	23,400	-	-	1,130.00 /wk	528,840
Allowances		/ls		*505,440*		*10,000*				*23,400*			/ls	*538,840*
1460.100 Testing														
Misc Test & Inspection	36.00 mo	-	-	-	-	-			-	-	2,500.00 /mo	90,000	2,500.00 /mo	90,000
Testing		/ls										*90,000*	/ls	*90,000*
1630.100 Mobilization / Demobiliza														
Mobilization / Demobilization	24.00 ea		/ea		-	-	4,560		/ea		-	-	190.00 /ea	4,560
Mobilization / Demobiliza		/ls					*4,560*						/ls	*4,560*
2502.012 Trench Shoring														
Trench Box, 16' Deep, 2 each	72.00 mo	-	-	-	-	-	-		1,025.00 /mo	73,800	-	-	1,025.00 /mo	73,800
Trench Shoring		/mo								*73,800*			/mo	*73,800*
01 General Conditions				**3,082,320**		**298,470**	**10,020**			**196,700**		**1,297,450**		**4,884,960**
1001 Station 13+21 to 33+00														
2240.120 Dewatering														
Wellpoint Dewatering	0.80 mo	24,400.00 /mo	18.00 /mh	19,520	10,500.00 /mo	8,400	-		/mo		-	-	34,900.00 /mo	27,920
Dewatering		/mo		*19,520*		*8,400*							/mo	*27,920*
2316.202 Pipe Excavation														
Excavate Silt-Clay, Loam, Hydraulic Hoe	7,990.00 cy	0.94 /cy	140.08 /cd	7,511	-	-	-		1.60 /cy	12,784	-	-	2.54 /cy	20,295

Spreadsheet Level	Takeoff Quantity	Labor Cost/Unit	Labor Price	Labor Amount	Material Price	Material Amount	Sub Amount	Sub Name	Equip Price	Equip Amount	Other Price	Other Amount	Total Cost/Unit	Total Amount
2316.202 Pipe Excavation														
Backfill and Compact, Machine	6,550.00 cy	1.53 /cy	140.08 /cd	10,022	-	-	-		0.89 /cy	5,830	-	-	2.42 /cy	15,851
Excess Material Offsite	3,590.00 cy	3.30 /cy	140.08 /cd	11,847	-	-	-		2.93 /cy	10,519	-	-	6.23 /cy	22,366
Pipe Excavation		*/cy*		*23,379*						*29,132*			*/cy*	*55,511*
2370.150 Temp Erosion Control														
Erosion Control Mats-Slopes	5,930.00 sf	0.12 /sf	12.08 /ch	716	2.00 /sf	13,046	-		-	-	-	-	2.32 /sf	13,762
Temp Erosion Control		*/sf*		*716*		*13,046*							*/sf*	*13,762*
2445.100 Pipe Bore and Jack														
Pipe Boring 72" Casing, RR Crossing, Station 14+00	100.00 lf	418.00 /lf	418.00 /lf	41,800	507.00 /lf	50,700			315.00 /lf	31,500	-	-	1,240.00 /lf	124,000
Pipe Boring 60" Casing, HWY 89 Crossing, Station 13+00	80.00 lf	348.00 /lf	348.00 /lf	27,840	422.00 /lf	33,760			262.00 /lf	20,960	-	-	1,032.00 /lf	82,560
Receiving Pits	2.00 ea	450.00 /ea	450.00 /ea	900	1,530.00 /ea	3,060	-		1,580.00 /ea	3,160	-	-	3,560.00 /ea	7,120
Entry Pit	2.00 ea	3,430.00 /ea	3,430.00 /ea	6,860	13,000.00 /ea	26,000	-		13,450.00 /ea	26,900	-	-	29,880.00 /ea	59,760
Pipe Bore and Jack		*/lf*		*77,400*		*113,520*				*82,520*			*/lf*	*273,440*
2502.014 Pipe Bedding														
Utility Bed Gravel-Crushed	2,155.00 cy	3.30 /cy	96.64 /cd	7,112	12.00 /cy	28,446	-		11.70 /cy	25,214	-	-	28.20 /cy	60,771
Pipe Bedding		*/cy*		*7,112*		*28,446*				*25,214*			*/cy*	*60,771*
2580.500 Utility Conflicts														
Utility Conflicts	1.00 ea	21,125.00 /ea	25.00 /mh	21,125	13,685.00 /ea	13,685	-		5,680.00 /ea	5,680	-	-	40,490.00 /ea	40,490
Utility Conflicts		*/ea*		*21,125*		*13,685*				*5,680*			*/ea*	*40,490*
2740.120 Asphalt Paving - SY														
Compacted Base 12", 200 LF by 24'	530.00 sy	-	-	-	-	-	11,093		-	-	-	-	20.93 /sy	11,093
Wear Course 1 1/2", 200 LF by 24'	530.00 sy	0.35 /sy	0.35 /sy	186	2.41 /sy	1,277			0.25 /sy	133	-	-	3.01 /sy	1,595
Bituminous Top Course 6", 200 LF by 24'	530.00 sy	0.76 /sy	0.76 /sy	403	8.45 /sy	4,479			0.55 /sy	292	-	-	9.76 /sy	5,173
Asphalt Paving - SY		*/sy*		*588*		*5,756*	*11,093*			*424*			*/sy*	*17,861*
2950.000 SITE RESTORATION														
Restore Landscaping	46.00 msf	30.00 /msf	30.00 /msf	1,380	50.00 /msf	2,300	-		20.00 /msf	920	-	-	100.00 /msf	4,600
SITE RESTORATION		*/msf*		*1,380*		*2,300*				*920*			*/msf*	*4,600*
11295.010 Valves- Butterfly Flange														
60" Isolation Valve Vault System, 12" By Pass	1.00 ea		/mh		/ea		113,200		-	-	-	-	113,200.00 /ea	113,200
Valves- Butterfly Flange		*/ea*					*113,200*						*/ea*	*113,200*
15230.301 XH Pipe PE														
60" Steel Pipe, 350 psi, Mortar Lined & Coated	1,979.00 lf	24.50 /lf	16.78 /mh	48,485	311.00 /lf	615,469	-		12.00 /lf	23,748	-	-	347.50 /lf	687,702
Welding per Joint - 60"	46.00 ea	4,537.00 /ea	4,537.00 /ea	208,702	125.00 /ea	5,750	-		100.00 /ea	4,600	-	-	4,762.00 /ea	219,052
XH Pipe PE		*/lf*		*257,187*		*621,219*				*28,348*			*/lf*	*906,754*
15230.314 Pipe Fittings														
60" Pipe Fittings	2.00 ea	750.00 /ea	16.78 /mh	1,500	7,500.00 /ea	15,000	-		175.00 /ea	350	-	-	8,425.00 /ea	16,850
Pipe Fittings		*/ea*		*1,500*		*15,000*				*350*			*/ea*	*16,850*

Spreadsheet Level	Takeoff Quantity	Labor Cost/Unit	Labor Price	Labor Amount	Material Price	Material Amount	Sub Amount	Sub Name	Equip Price	Equip Amount	Other Price	Other Amount	Total Cost/Unit	Total Amount
15230.340 Turn Outs, Drains, Air Re														
Air Release Vault, 2"	1.00 ea	2,937.00 /ea	2,937.00 /ea	2,937	6,298.00 /ea	6,298	-		479.00 /ea	479	-	-	9,714.00 /ea	9,714
Air Vacuum/Air Release Vault, 12"	1.00 ea	5,078.00 /ea	5,078.00 /ea	5,078	26,998.00 /ea	26,998	-		757.00 /ea	757	-	-	32,833.00 /ea	32,833
Turn Outs, Drains, Air Re		/ea		8,015		33,296				1,236			/ea	42,547
16151.110 Cathodic Protection														
Cathodic Protection, Impressed Current	1,979.00 lf		/mh		/lf		1,979		-	-	-	-	1.00 /lf	1,979
Joint Seal	46.00 ea		/mh		/ea		5,750		-	-	-	-	125.00 /ea	5,750
Joint Bond	46.00 ea		/mh		/ea		2,760		-	-	-	-	60.00 /ea	2,760
Test Station at 1000 LF	2.00 ea		/mh		/ea		800		-	-	-	-	400.00 /ea	800
Cathodic Protection		/lf					11,289						/lf	11,289
1001 Station 13+21 to 33+00				423,923		854,668	135,582			173,824				1,587,996
1002 Station 33+00 to 80+00														
2240.120 Dewatering														
Wellpoint Dewatering	0.90 mo	24,400.00 /mo	18.00 /mh	21,960	10,500.00 /mo	9,450	-		/mo		-	-	34,900.00 /mo	31,410
Dewatering		/mo		21,960		9,450							/mo	31,410
2316.202 Pipe Excavation														
Excavate Silt-Clay, Loam, Hydraulic Hoe	18,980.00 cy	0.94 /cy	140.08 /cd	17,841	-	-	-		1.60 /cy	30,368	-	-	2.54 /cy	48,209
Backfill and Compact, Machine	15,560.00 cy	1.53 /cy	140.08 /cd	23,807	-	-	-		0.89 /cy	13,848	-	-	2.42 /cy	37,655
Excess Material Offsite	8,530.00 cy	3.30 /cy	140.08 /cd	28,149	-	-	-		2.93 /cy	24,993	-	-	6.23 /cy	53,142
Pipe Excavation		/cy		69,797						69,209			/cy	139,006
2370.150 Temp Erosion Control														
Erosion Control Mats-Slopes	14,100.00 sf	0.12 /sf	12.08 /ch	1,703	2.00 /sf	31,020	-		-	-	-	-	2.32 /sf	32,723
Temp Erosion Control		/sf		1,703		31,020							/sf	32,723
2446.100 Pipe Bore and Jack														
Pipe Boring 72" Casing, RR Crossing, Station 38+00	100.00 lf	418.00 /lf	418.00 /lf	41,800	507.00 /lf	50,700			315.00 /lf	31,500	-	-	1,240.00 /lf	124,000
Pipe Boring 72" Casing, HWY 6 Crossing, Station 39+00	100.00 lf	418.00 /lf	418.00 /lf	41,800	507.00 /lf	50,700			315.00 /lf	31,500	-	-	1,240.00 /lf	124,000
Receiving Pits	2.00 ea	450.00 /ea	450.00 /ea	900	1,530.00 /ea	3,060	-		1,580.00 /ea	3,160	-	-	3,560.00 /ea	7,120
Entry Pit	2.00 ea	3,430.00 /ea	3,430.00 /ea	6,860	13,000.00 /ea	26,000	-		13,450.00 /ea	26,900	-	-	29,880.00 /ea	59,760
Pipe Bore and Jack		/lf		91,360		130,460				93,060			/lf	314,880
2502.014 Pipe Bedding														
Utility Bed Gravel-Crushed	5,115.00 cy	3.30 /cy	96.64 /cd	16,880	12.00 /cy	57,518	-		11.70 /cy	59,846	-	-	28.20 /cy	144,243
Pipe Bedding		/cy		16,880		57,518				59,846			/cy	144,243
2580.500 Utility Conflicts														
Utility Conflicts	1.00 ea	21,125.00 /ea	25.00 /mh	21,125	13,685.00 /ea	13,685	-		5,680.00 /ea	5,680	-	-	40,490.00 /ea	40,490
Replace Utility Connection, Water, Sewer, Telephone, Gas, Electric	5.00 ea	507.00 /ea	507.00 /ea	2,535	500.00 /ea	2,500	-		135.00 /ea	675	-	-	1,142.00 /ea	5,710
Utility Conflicts		/ea		23,660		16,185				6,355			/ea	46,200
2740.120 Asphalt Paving - SY														

Spreadsheet Level	Takeoff Quantity	Labor Cost/Unit	Labor Price	Labor Amount	Material Price	Material Amount	Sub Amount	Sub Name	Equip Price	Equip Amount	Other Price	Other Amount	Total Cost/Unit	Total Amount
2740.120 Asphalt Paving - SY														
Compacted Base 12", 4700 LF by 24'	12,530.00 sy	-	-	-	-	-	262,253		-	-	-	-	20.93 /sy	262,253
Bituminous Top Course 4", 4700 LF by 24'	12,530.00 sy	-	-	-	-	-	100,240		-	-	-	-	8.00 /sy	100,240
Asphalt Paving - SY		/sy					*362,493*						/sy	*362,493*
2950.000 SITE RESTORATION														
Restore Landscaping	20.00 msf	30.00 /msf	30.00 /msf	600	50.00 /msf	1,000	-		20.00 /msf	400	-	-	100.00 /msf	2,000
SITE RESTORATION		/msf		*600*		*1,000*				*400*			/msf	*2,000*
15230.301 XH Pipe PE														
60" Steel Pipe, 400 psi, Mortar Lined & Coated	4,700.00 lf	24.50 /lf	16.78 /mh	115,150	322.00 /lf	1,513,400	-		12.00 /lf	56,400	-	-	358.50 /lf	1,684,950
Welding per Joint - 60"	104.00 ea	4,537.00 /ea	4,537.00 /ea	471,848	125.00 /ea	13,000	-		100.00 /ea	10,400	-	-	4,762.00 /ea	495,248
XH Pipe PE		/lf		*586,998*		*1,526,400*				*66,800*			/lf	*2,180,198*
15230.314 Pipe Fittings														
60" Pipe Fittings	4.00 ea	750.00 /ea	16.78 /mh	3,000	7,500.00 /ea	30,000	-		175.00 /ea	700	-	-	8,425.00 /ea	33,700
Pipe Fittings		/ea		*3,000*		*30,000*				*700*			/ea	*33,700*
15230.340 Turn Outs, Drains, Air Re														
Air Release Vault, 2"	3.00 ea	2,937.00 /ea	2,937.00 /ea	8,811	6,298.00 /ea	18,894	-		479.00 /ea	1,437	-	-	9,714.00 /ea	29,142
36" Turn Out, 36 cfs, Spanish Fork, Station 80+00	1.00 ea	7,579.00 /ea	7,579.00 /ea	7,579	157,107.00 /ea	157,107	23,500		3,187.00 /ea	3,187	-	-	191,373.00 /ea	191,373
Turn Outs, Drains, Air Re		/ea		*16,390*		*176,001*	*23,500*			*4,624*			/ea	*220,515*
16151.110 Cathodic Protection														
Cathodic Protection, Impressed Current	4,700.00 lf		/mh		/lf		4,700		-	-	-	-	1.00 /lf	4,700
Joint Seal	104.00 ea		/mh		/ea		13,000		-	-	-	-	125.00 /ea	13,000
Joint Bond	104.00 ea		/mh		/ea		6,240		-	-	-	-	60.00 /ea	6,240
Test Station at 1000 LF	5.00 ea		/mh		/ea		2,000		-	-	-	-	400.00 /ea	2,000
Insulating Flange Kits	1.00 ea		/mh		/ea		800		-	-	-	-	800.00 /ea	800
PCR Kits	1.00 ea		/mh		/ea		2,000		-	-	-	-	2,000.00 /ea	2,000
Cathodic Protection		/lf					*28,740*						/lf	*28,740*
1002 Station 33+00 to 80+00				**832,348**		**1,988,034**	**414,733**			**390,994**				**3,536,108**
1003 Station 80+00 to 104+00														
2240.120 Dewatering														
Wellpoint Dewatering	1.00 mo	24,400.00 /mo	18.00 /mh	24,400	10,500.00 /mo	10,500	-		/mo		-	-	34,900.00 /mo	34,900
Dewatering		/mo		*24,400*		*10,500*							/mo	*34,900*
2316.202 Pipe Excavation														
Excavate Silt-Clay, Loam, Hydraulic Hoe	8,912.00 cy	0.94 /cy	140.08 /cd	8,377	-	-	-		1.60 /cy	14,259	-	-	2.54 /cy	22,636
Backfill and Compact, Machine	7,500.00 cy	1.53 /cy	140.08 /cd	11,475	-	-	-		0.89 /cy	6,675	-	-	2.42 /cy	18,150
Excess Material Offsite	3,756.00 cy	3.30 /cy	140.08 /cd	12,395	-	-	-		2.93 /cy	11,005	-	-	6.23 /cy	23,400
Pipe Excavation		/cy		*32,247*						*31,929*			/cy	*84,186*
2370.150 Temp Erosion Control														
Erosion Control Mats-Slopes	7,200.00 sf	0.12 /sf	12.08 /ch	870	2.00 /sf	15,840	-		-	-	-	-	2.32 /sf	16,710
Temp Erosion Control		/sf		*870*		*15,840*							/sf	*16,710*
2400.980 Tunnels														

Spreadsheet Level	Takeoff Quantity	Labor Cost/Unit	Labor Price	Labor Amount	Material Price	Material Amount	Sub Amount	Sub Name	Equip Price	Equip Amount	Other Price	Other Amount	Total Cost/Unit	Total Amount
2400.980 Tunnels														
Microtunneling 60", Canal, Station 98+00	50.00 lf	-	-	-	-	-	***71,500***		-	-	-	-	1,430.00 /lf	71,500
Microtunneling 60", River, Station 100+00	200.00 lf	-	-	-	-	-	***286,000***		-	-	-	-	1,430.00 /lf	286,000
Tunnels		*/lf*					*357,500*						*/lf*	*357,500*
2446.100 Pipe Bore and Jack														
Pipe Boring 60" Casing, Canal Crossing, Station 103+00	50.00 lf	348.00 /lf	348.00 /lf	17,400	422.00 /lf	21,100			262.00 /lf	13,100	-	-	1,032.00 /lf	51,600
Receiving Pits	1.00 ea	450.00 /ea	450.00 /ea	450	1,530.00 /ea	1,530	-		1,580.00 /ea	1,580	-	-	3,560.00 /ea	3,560
Entry Pit	1.00 ea	3,430.00 /ea	3,430.00 /ea	3,430	13,000.00 /ea	13,000	-		13,450.00 /ea	13,450	-	-	29,880.00 /ea	29,880
Pipe Bore and Jack		*/lf*		*21,280*		*35,630*				*28,130*			*/lf*	*85,040*
2502.014 Pipe Bedding														
Utility Bed Gravel-Crushed	2,345.00 cy	3.30 /cy	96.64 /cd	7,739	12.00 /cy	30,954	-		11.70 /cy	27,437	-	-	28.20 /cy	66,129
Pipe Bedding		*/cy*		*7,739*		*30,954*				*27,437*			*/cy*	*66,129*
2580.500 Utility Conflicts														
Utility Conflicts	2.00 ea	21,125.00 /ea	25.00 /mh	42,250	13,685.00 /ea	27,370	-		5,680.00 /ea	11,360	-	-	40,490.00 /ea	80,980
Replace Utility Connection, Water, Sewer, Telephone, Gas, Electric	25.00 ea	507.00 /ea	507.00 /ea	12,675	500.00 /ea	12,500	-		135.00 /ea	3,375	-	-	1,142.00 /ea	28,550
Utility Conflicts		*/ea*		*54,925*		*39,870*				*14,735*			*/ea*	*109,530*
2630.006 Catch Basin 6'														
8" Blow-Off Drainage System, 99+00	1.00 ea		/ch		/ea		***11,100***		/ch		-	-	11,100.00 /ea	11,100
Catch Basin 6'		*/ea*					*11,100*						*/ea*	*11,100*
2950.000 SITE RESTORATION														
Restore Landscaping	54.00 msf	30.00 /msf	30.00 /msf	1,620	50.00 /msf	2,700	-		20.00 /msf	1,080	-	-	100.00 /msf	5,400
SITE RESTORATION		*/msf*		*1,620*		*2,700*				*1,080*			*/msf*	*5,400*
15230.301 XH Pipe PE														
54" Steel Pipe, 400 psi, Mortar Lined & Coated	2,400.00 lf	24.50 /lf	16.78 /mh	58,800	253.00 /lf	607,200	-		12.00 /lf	28,800	-	-	289.50 /lf	694,800
Welding per Joint - 54"	54.00 ea	4,083.00 /ea	4,083.00 /ea	220,482	112.50 /ea	6,075	-		90.00 /ea	4,860	-	-	4,285.50 /ea	231,417
XH Pipe PE		*/lf*		*279,282*		*613,275*				*33,660*			*/lf*	*926,217*
15230.314 Pipe Fittings														
54" Pipe Fittings	2.00 ea	750.00 /ea	16.78 /mh	1,500	7,000.00 /ea	14,000	-		175.00 /ea	350	-	-	7,925.00 /ea	15,850
Pipe Fittings		*/ea*		*1,500*		*14,000*				*350*			*/ea*	*15,850*
15230.340 Turn Outs, Drains, Air Re														
Air Release Vault, 2"	1.00 ea	2,937.00 /ea	2,937.00 /ea	2,937	6,298.00 /ea	6,298	-		479.00 /ea	479	-	-	9,714.00 /ea	9,714
Drain Vault, 8" w/AC	1.00 ea	9,093.00 /ea	9,093.00 /ea	9,093	23,590.00 /ea	23,590	-		2,080.00 /ea	2,080	-	-	34,763.00 /ea	34,763
Turn Outs, Drains, Air Re		*/ea*		*12,030*		*29,888*				*2,559*			*/ea*	*44,477*
16151.110 Cathodic Protection														
Cathodic Protection, Impressed Current	2,400.00 lf		/mh		/lf		2,400		-	-	-	-	1.00 /lf	2,400
Joint Seal	54.00 ea		/mh		/ea		6,750		-	-	-	-	125.00 /ea	6,750
Joint Bond	54.00 ea		/mh		/ea		3,240		-	-	-	-	60.00 /ea	3,240
Test Station at 1000 LF	2.00 ea		/mh		/ea		800		-	-	-	-	400.00 /ea	800

Spreadsheet Level	Takeoff Quantity	Labor Cost/Unit	Labor Price	Labor Amount	Material Price	Material Amount	Sub Amount	Sub Name	Equip Price	Equip Amount	Other Price	Other Amount	Total Cost/Unit	Total Amount
Cathodic Protection		/lf					13,190						/lf	13,190
1003 Station 80+00 to 104+00				435,892		792,657	381,790			139,890				1,750,229
1004 Station 104+00 to 123+00														
2240.120 Dewatering														
Wellpoint Dewatering	0.70 mo	24,400.00 /mo	18.00 /mh	17,080	10,500.00 /mo	7,350	-		/mo		-	-	34,900.00 /mo	24,430
Dewatering		/mo		17,080		7,350							/mo	24,430
2316.202 Pipe Excavation														
Excavate Silt-Clay, Loam, Hydraulic Hoe	7,060.00 cy	0.94 /cy	140.08 /cd	6,636	-	-	-		1.60 /cy	11,296	-	-	2.54 /cy	17,932
Backfill and Compact, Machine	5,940.00 cy	1.53 /cy	140.08 /cd	9,088	-	-	-		0.89 /cy	5,287	-	-	2.42 /cy	14,375
Excess Material Offsite	2,975.00 cy	3.30 /cy	140.08 /cd	9,818	-	-	-		2.93 /cy	8,717	-	-	6.23 /cy	18,534
Pipe Excavation		/cy		25,542						25,299			/cy	50,641
2370.150 Temp Erosion Control														
Erosion Control Mats-Slopes	5,700.00 sf	0.12 /sf	12.08 /ch	689	2.00 /sf	12,540	-		-	-	-	-	2.32 /sf	13,229
Temp Erosion Control		/sf		689		12,540							/sf	13,229
2502.014 Pipe Bedding														
Utility Bed Gravel-Crushed	1,860.00 cy	3.30 /cy	96.64 /cd	6,138	12.00 /cy	24,552	-		11.70 /cy	21,762	-	-	28.20 /cy	52,452
Pipe Bedding		/cy		6,138		24,552				21,762			/cy	52,452
2580.500 Utility Conflicts														
Utility Conflicts	1.00 ea	21,125.00 /ea	25.00 /mh	21,125	13,685.00 /ea	13,685	-		5,680.00 /ea	5,680	-	-	40,490.00 /ea	40,490
Replace Utility Connection, Water, Sewer, Telephone, Gas, Electric	5.00 ea	507.00 /ea	507.00 /ea	2,535	500.00 /ea	2,500	-		135.00 /ea	675	-	-	1,142.00 /ea	5,710
Utility Conflicts		/ea		23,660		16,185				6,355			/ea	46,200
2630.006 Catch Basin 6'														
4" Blow-Off Drainage System, 126+00	1.00 ea		/ch		/ea		***10,200***		/ch		-	-	10,200.00 /ea	10,200
Catch Basin 6'		/ea					10,200						/ea	10,200
2740.120 Asphalt Paving - SY														
Compacted Base 12", 1900 LF by 20'	4,220.00 sy	-	-	-	-	-	88,325		-	-	-	-	20.93 /sy	88,325
Bituminous Top Course 4", 1900 LF by 20'	4,220.00 sy	-	-	-	-	-	33,760		-	-	-	-	8.00 /sy	33,760
Asphalt Paving - SY		/sy					122,085						/sy	122,085
2950.000 SITE RESTORATION														
Restore Landscaping	20.00 msf	30.00 /msf	30.00 /msf	600	50.00 /msf	1,000	-		20.00 /msf	400	-	-	100.00 /msf	2,000
SITE RESTORATION		/msf		600		1,000				400			/msf	2,000
15230.301 XH Pipe PE														
54" Steel Pipe, 350 psi, Mortar Lined & Coated	1,900.00 lf	24.50 /lf	16.78 /mh	46,550	249.00 /lf	473,100	-		12.00 /lf	22,800	-	-	285.50 /lf	542,450
Welding per Joint - 54"	44.00 ea	4,083.00 /ea	4,083.00 /ea	179,652	112.50 /ea	4,950	-		90.00 /ea	3,960	-	-	4,285.50 /ea	188,562
XH Pipe PE		/lf		226,202		478,050				26,760			/lf	731,012
15230.314 Pipe Fittings														
54" Pipe Fittings	2.00 ea	750.00 /ea	16.78 /mh	1,500	7,000.00 /ea	14,000	-		175.00 /ea	350	-	-	7,925.00 /ea	15,850

Spreadsheet Level	Takeoff Quantity	Labor Cost/Unit	Labor Price	Labor Amount	Material Price	Material Amount	Sub Amount	Sub Name	Equip Price	Equip Amount	Other Price	Other Amount	Total Cost/Unit	Total Amount
Pipe Fittings		/ea		*1,500*		*14,000*				*350*			/ea	*15,850*
15230.340 Turn Outs, Drains, Air Re														
Air Vacuum/Air Release Vault, 10"	1.00 ea	5,078.00 /ea	5,078.00 /ea	5,078	25,672.00 /ea	25,672	-		757.00 /ea	757	-	-	31,507.00 /ea	31,507
Turn Outs, Drains, Air Re		/ea		*5,079*		*25,672*				*757*			/ea	*31,507*
15151.110 Cathodic Protection														
Cathodic Protection, Impressed Current	1,900.00 lf		/mh		/lf		1,900		-	-	-	-	1.00 /lf	1,900
Joint Seal	44.00 ea		/mh		/ea		5,500		-	-	-	-	125.00 /ea	5,500
Joint Bond	44.00 ea		/mh		/ea		2,640		-	-	-	-	60.00 /ea	2,640
Test Station at 1000 LF	2.00 ea		/mh		/ea		800		-	-	-	-	400.00 /ea	800
Cathodic Protection		/lf					*10,840*						/lf	*10,840*
1004 Station 104+00 to 123+00				**306,489**		**579,349**	**143,125**			**81,683**				**1,110,646**
1005 Station 123+00 to 354+54														
2240.120 Dewatering														
Wellpoint Dewatering	4.50 mo	24,400.00 /mo	18.00 /mh	109,800	10,500.00 /mo	47,250	-		/mo		-	-	34,900.00 /mo	157,050
Dewatering		/mo		*109,800*		*47,250*							/mo	*157,050*
2315.202 Pipe Excavation														
Excavate Silt-Clay, Loam, Hydraulic Hoe	85,950.00 cy	0.94 /cy	140.08 /cd	80,793	-	-	-		1.60 /cy	137,520	-	-	2.54 /cy	218,313
Backfill and Compact, Machine	72,315.00 cy	1.53 /cy	140.08 /cd	110,642	-	-	-		0.89 /cy	64,360	-	-	2.42 /cy	175,002
Excess Material Offsite	36,230.00 cy	3.30 /cy	140.08 /cd	119,559	-	-	-		2.93 /cy	106,154	-	-	6.23 /cy	225,713
Pipe Excavation		/cy		*310,994*						*308,034*			/cy	*619,028*
2370.150 Temp Erosion Control														
Erosion Control Mats-Slopes	69,440.00 sf	0.12 /sf	12.08 /ch	8,388	2.00 /sf	152,768	-		-	-	-	-	2.32 /sf	161,156
Temp Erosion Control		/sf		*8,388*		*152,768*							/sf	*161,156*
2446.100 Pipe Bore and Jack														
Pipe Boring 66" Casing, Canal Crossing, Station 143+00	50.00 lf	348.00 /lf	348.00 /lf	17,400	422.00 /lf	21,100			262.00 /lf	13,100	-	-	1,032.00 /lf	51,600
Pipe Boring 66" Casing, Canal Crossing, Station 242+00	50.00 lf	348.00 /lf	348.00 /lf	17,400	422.00 /lf	21,100			262.00 /lf	13,100	-	-	1,032.00 /lf	51,600
Receiving Pits	2.00 ea	450.00 /ea	450.00 /ea	900	1,530.00 /ea	3,060	-		1,580.00 /ea	3,160	-	-	3,560.00 /ea	7,120
Entry Pit	2.00 ea	3,430.00 /ea	3,430.00 /ea	6,860	13,000.00 /ea	26,000	-		13,450.00 /ea	26,900	-	-	29,880.00 /ea	59,760
Pipe Bore and Jack		/lf		*42,560*		*71,260*				*56,260*			/lf	*170,080*
2502.014 Pipe Bedding														
Utility Bed Gravel-Crushed	22,595.00 cy	3.30 /cy	96.64 /cd	74,564	12.00 /cy	298,254	-		11.70 /cy	264,362	-	-	28.20 /cy	637,179
Pipe Bedding		/cy		*74,564*		*298,254*				*264,362*			/cy	*637,179*
2580.500 Utility Conflicts														
Utility Conflicts	8.00 ea	21,125.00 /ea	25.00 /mh	169,000	13,685.00 /ea	109,480	-		5,680.00 /ea	45,440	-	-	40,490.00 /ea	323,920
Replace Utility Connection, Water, Sewer, Telephone, Gas, Electric	150.00 ea	507.00 /ea	507.00 /ea	76,050	500.00 /ea	75,000	-		135.00 /ea	20,250	-	-	1,142.00 /ea	171,300
Utility Conflicts		/ea		*245,050*		*184,480*				*65,690*			/ea	*495,220*
2630.006 Catch Basin 6'														

Spreadsheet Level	Takeoff Quantity	Labor Cost/Unit	Labor Price	Labor Amount	Material Price	Material Amount	Sub Amount	Sub Name	Equip Price	Equip Amount	Other Price	Other Amount	Total Cost/Unit	Total Amount
2630.006 Catch Basin 6'														
4" Blow-Off Drainage System, 140+00	1.00 ea		/ch		/ea		***10,200***		/ch		-	-	10,200.00 /ea	10,200
6" Blow-Off Drainage System, 192+00	1.00 ea		/ch		/ea		***11,800***		/ch		-	-	11,800.00 /ea	11,800
6" Blow-Off Drainage System, 235+00	1.00 ea		/ch		/ea		***11,000***		/ch		-	-	11,000.00 /ea	11,000
4" Blow-Off Drainage System, 258+00	1.00 ea		/ch		/ea		***11,000***		/ch		-	-	11,000.00 /ea	11,000
4" Blow-Off Drainage System, 322+00	1.00 ea		/ch		/ea		***11,000***		/ch		-	-	11,000.00 /ea	11,000
4" Blow-Off Drainage System, 331+00	1.00 ea		/ch		/ea		***11,000***		/ch		-	-	11,000.00 /ea	11,000
4" Blow-Off Drainage System, 354+00	1.00 ea		/ch		/ea		***11,000***		/ch		-	-	11,000.00 /ea	11,000
Catch Basin 6'			/ea				*77,000*						/ea	*77,000*
2740.120 Asphalt Paving - SY														
Compacted Base 12", 19655 LF by 20'	43,680.00 sy	-	-	-	-	-	914,222		-	-	-	-	20.93 /sy	914,222
Bituminous Top Course 4", 19655 LF by 20'	43,680.00 sy	-	-	-	-	-	349,440		-	-	-	-	8.00 /sy	349,440
Asphalt Paving - SY			/sy				*1,263,662*						/sy	*1,263,662*
2770.110 Concrete Curbs & Gutters														
Curb & Gutter, Concrete, Station 245+00 to 273+00 & 320+00 to 354+54	6,254.00 lf	1.95 /lf	53.75 /ch	12,195	7.48 /lf	46,780	-		0.60 /lf	3,752	-	-	10.03 /lf	62,728
Concrete Curbs & Gutters		/ls		*12,195*		*46,780*				*3,752*			/ls	*62,728*
2950.000 SITE RESTORATION														
Restore Landscaping	150.00 msf	30.00 /msf	30.00 /msf	4,500	50.00 /msf	7,500	-		20.00 /msf	3,000	-	-	100.00 /msf	15,000
SITE RESTORATION		/msf		*4,500*		*7,500*				*3,000*			/msf	*15,000*
3000.150 Concrete Sidewalks and Dr														
20' Wide Driveways	210.00 lf	26.60 /lf	26.60 /lf	5,586	30.40 /lf	6,384			0.40 /lf	84	-	-	57.40 /lf	12,054
Concrete Sidewalks and Dr		/cy		*5,586*		*6,384*				*84*			/cy	*12,054*
15230.301 XH Pipe PE														
54" Steel Pipe, 400 psi, Mortar Lined & Coated	23,154.00 lf	24.50 /lf	16.78 /mh	567,272	253.00 /lf	5,857,962	-		12.00 /lf	277,848	-	-	289.50 /lf	6,703,082
Welding per Joint - 54"	496.00 ea	4,083.00 /ea	4,083.00 /ea	2,025,168	112.50 /ea	55,800	-		90.00 /ea	44,640	-	-	4,285.50 /ea	2,125,608
XH Pipe PE		/lf		*2,592,440*		*5,913,762*				*322,488*			/lf	*8,828,690*
15230.314 Pipe Fittings														
54" Pipe Fittings	11.00 ea	750.00 /ea	16.78 /mh	8,250	7,000.00 /ea	77,000	-		175.00 /ea	1,925	-	-	7,925.00 /ea	87,175
Pipe Fittings		/ea		*8,250*		*77,000*				*1,925*			/ea	*87,175*
15230.340 Turn Outs, Drains, Air Re														
Air Release Vault, 2"	7.00 ea	2,937.00 /ea	2,937.00 /ea	20,559	6,298.00 /ea	44,086	-		479.00 /ea	3,353	-	-	9,714.00 /ea	67,998
Air Vacuum/Air Release Vault, 10"	7.00 ea	5,078.00 /ea	5,078.00 /ea	35,546	25,672.00 /ea	179,704	-		757.00 /ea	5,299	-	-	31,507.00 /ea	220,549
Drain Vault, 4"	6.00 ea	8,997.00 /ea	8,997.00 /ea	53,982	11,041.00 /ea	66,246	-		2,080.00 /ea	12,480	-	-	22,118.00 /ea	132,708
Drain Vault, 6" w/AC	2.00 ea	7,653.50 /ea	7,653.50 /ea	***15,307***	12,992.00 /ea	25,984	-		2,080.00 /ea	4,160	-	-	22,725.50 /ea	45,451

Spreadsheet Level	Takeoff Quantity	Labor Cost/Unit	Labor Price	Labor Amount	Material Price	Material Amount	Sub Amount	Sub Name	Equip Price	Equip Amount	Other Price	Other Amount	Total Cost/Unit	Total Amount
15230.340 Turn Outs, Drains, Air Re														
18" Turn Out, 10 cfs, Woodland Hills, Station 312+22	1.00 ea	6,721.00 /ea	6,721.00 /ea	6,721	68,914.00 /ea	68,914	23,500		1,958.00 /ea	1,958	-	-	101,093.00 /ea	101,093
Turn Outs, Drains, Air Re		*/ea*		*132,115*		*384,934*	*23,500*			*27,250*			*/ea*	*567,799*
16151.110 Cathodic Protection														
Cathodic Protection, Impressed Current	23,154.00 lf		/mh		/lf		23,154		-	-	-	-	1.00 /lf	23,154
Joint Sea	496.00 ea		/mh		/ea		62,000		-	-	-	-	125.00 /ea	62,000
Joint Bond	496.00 ea		/mh		/ea		29,760		-	-	-	-	60.00 /ea	29,760
Test Station at 1000 LF	23.00 ea		/mh		/ea		9,200		-	-	-	-	400.00 /ea	9,200
Insulating Flange Kits	1.00 ea		/mh		/ea		800		-	-	-	-	800.00 /ea	800
PCR Kits	1.00 ea		/mh		/ea		2,000		-	-	-	-	2,000.00 /ea	2,000
Cathodic Protection		*/lf*					*126,914*						*/lf*	*126,914*
1005 Station 123+00 to 354+54				**3,546,443**		**7,190,372**	**1,491,076**			**1,052,845**				**13,280,736**
1006 Station 354+54 to 496+00														
2240.120 Dewatering														
Wellpoint Dewatering	3.00 mo	24,400.00 /mo	18.00 /mh	73,200	10,500.00 /mo	31,500	-		/mo		-	-	34,900.00 /mo	104,700
Dewatering		*/mo*		*73,200*		*31,500*							*/mo*	*104,700*
2316.202 Pipe Excavation														
Excavate Silt-Clay, Loam, Hydraulic Hoe	48,195.00 cy	0.94 /cy	140.08 /cd	45,303	-	-	-		1.60 /cy	77,112	-	-	2.54 /cy	122,415
Backfill and Compact, Machine	41,615.00 cy	1.53 /cy	140.08 /cd	63,671	-	-	-		0.89 /cy	37,037	-	-	2.42 /cy	100,708
Excess Material Offsite	18,855.00 cy	3.30 /cy	140.08 /cd	62,222	-	-	-		2.93 /cy	55,245	-	-	6.23 /cy	117,467
Pipe Excavation		*/cy*		*171,196*						*169,395*			*/cy*	*340,590*
2370.150 Temp Erosion Control														
Erosion Control Mats-Slopes	42,430.00 sf	0.12 /sf	12.08 /ch	5,126	2.00 /sf	93,346	-		-	-	-	-	2.32 /sf	98,472
Temp Erosion Control		*/sf*		*5,126*		*93,346*							*/sf*	*98,472*
2502.014 Pipe Bedding														
Utility Bed Gravel-Crushed	12,280.00 cy	3.30 /cy	96.64 /cd	40,524	12.00 /cy	162,096	-		11.70 /cy	143,676	-	-	28.20 /cy	346,296
Pipe Bedding		*/cy*		*40,524*		*162,096*				*143,676*			*/cy*	*346,296*
2580.500 Utility Conflicts														
Utility Conflicts	5.00 ea	21,125.00 /ea	25.00 /mh	105,625	13,685.00 /ea	68,425	-		5,680.00 /ea	28,400	-	-	40,490.00 /ea	202,450
Replace Utility Connection, Water, Sewer, Telephone, Gas, Electric	100.00 ea	507.00 /ea	507.00 /ea	50,700	500.00 /ea	50,000	-		135.00 /ea	13,500	-	-	1,142.00 /ea	114,200
Utility Conflicts		*/ea*		*156,325*		*118,425*				*41,900*			*/ea*	*316,650*
2630.006 Catch Basin 6'														
4" Blow-Off Drainage System, 413+50	1.00 ea		/ch		/ea		***11,000***		/ch		-	-	11,000.00 /ea	11,000
4" Blow-Off Drainage System, 482+50	1.00 ea		/ch		/ea		***11,000***		/ch		-	-	11,000.00 /ea	11,000
Catch Basin 6'		*/ea*					*22,000*						*/ea*	*22,000*
2740.120 Asphalt Paving - SY														
Compacted Base 12", 13146 LF by 20'	29,213.00 sy	-	-	-	-	-	611,428		-	-	-	-	20.93 /sy	611,428

Spreadsheet Level	Takeoff Quantity	Labor Cost/Unit	Labor Price	Labor Amount	Material Price	Material Amount	Sub Amount	Sub Name	Equip Price	Equip Amount	Other Price	Other Amount	Total Cost/Unit	Total Amount
2740.120 Asphalt Paving - SY														
Bituminous Top Course 4", 13146 LF by 20'	29,213.00 sy	-	-	-	-	-	233,704		-	-	-	-	8.00 /sy	233,704
Asphalt Paving - SY		*/sy*					*845.132*						*/sy*	*845,132*
2770.110 Concrete Curbs & Gutters														
Curb & Gutter, Concrete	5,000.00 lf	1.95 /lf	53.75 /ch	9,750	7.48 /lf	37,400	-		0.60 /lf	3,000	-	-	10.03 /lf	50,150
Concrete Curbs & Gutters		*/ls*		*9,750*		*37,400*				*3,000*			*/ls*	*50,150*
2950.000 SITE RESTORATION														
Restore Landscaping	280.00 msf	30.00 /msf	30.00 /msf	8,400	50.00 /msf	14,000	-		20.00 /msf	5,600	-	-	100.00 /msf	28,000
SITE RESTORATION		*/msf*		*8,400*		*14,000*				*5,600*			*/msf*	*28,000*
3000.150 Concrete Sidewalks and Dr														
20' Wide Driveways	300.00 lf	26.60 /lf	26.60 /lf	7,980	30.40 /lf	9,120			0.40 /lf	120	-	-	57.40 /lf	17,220
Concrete Sidewalks and Dr		*/cy*		*7,980*		*9,120*				*120*			*/cy*	*17,220*
15230.301 XH Pipe PE														
48" Steel Pipe, 400 ps, Mortar Linec & Coated	14,146.00 lf	24.50 /lf	16.78 /mh	346,577	218.00 /lf	3,083,828	-		12.00 /lf	169,752	-	-	254.50 /lf	3,600,157
Welding per Joint - 48"	301.00 ea	3,612.00 /ea	3,612.00 /ea	1,087,212	112.50 /ea	33,863	-		90.00 /ea	27,090	-	-	3,814.50 /ea	1,148,165
XH Pipe PE		*/lf*		*1,433,789*		*3,117,691*				*196,842*			*/lf*	*4,748,321*
15230.314 Pipe Fittings														
48" Pipe Fittings	4.00 ea	750.00 /ea	16.78 /mh	3,000	6,200.00 /ea	24,800	-		155.00 /ea	620	-	-	7,105.00 /ea	28,420
Pipe Fittings		*/ea*		*3,000*		*24,800*				*620*			*/ea*	*28,420*
15230.349 Turn Outs, Drains, Air Re														
Air Release Vault, 2"	8.00 ea	2,937.00 /ea	2,937.00 /ea	23,496	6,298.00 /ea	50,384	-		479.00 /ea	3,832	-	-	9,714.00 /ea	77,712
Air VacJum/Air Release Vault, 8"	2.00 ea	5,078.00 /ea	5,078.00 /ea	10,156	21,428.00 /ea	42,856	-		757.00 /ea	1,514	-	-	27,263.00 /ea	54,526
Drain Vault, 4"	2.00 ea	8,997.00 /ea	8,997.00 /ea	17,994	11,041.00 /ea	22,082	-		2,080.00 /ea	4,160	-	-	22,118.00 /ea	44,236
36" Turn Out, 45 cfs, Salem, Station 354+54	1.00 ea	7,579.00 /ea	7,579.00 /ea	7,579	157,107.00 /ea	157,107	23,500		3,187.00 /ea	3,187	-	-	191,373.00 /ea	191,373
18" Turn Out, 10 cfs, Elk Ridge, Station 393+25	1.00 ea	6,721.00 /ea	6,721.00 /ea	6,721	68,914.00 /ea	68,914	23,500		1,958.00 /ea	1,958	-	-	101,093.00 /ea	101,093
Turn Outs, Drains, Air Re		*/ea*		*65,946*		*341,343*	*47,000*			*14,651*			*/ea*	*468,940*
16151.110 Cathodic Protection														
Cathodic Protection, Impressed Current	14,146.00 lf		/mh		/lf		14,146		-	-	-	-	1.00 /lf	14,146
Joint Seal	301.00 ea		/mh		/ea		37,625		-	-	-	-	125.00 /ea	37,625
Joint Bond	301.00 ea		/mh		/ea		18,060		-	-	-	-	60.00 /ea	18,060
Test Station at 1000 LF	14.00 ea		/mh		/ea		5,600		-	-	-	-	400.00 /ea	5,600
Insulating Flange Kits	2.00 ea		/mh		/ea		1,600		-	-	-	-	800.00 /ea	1,600
PCR Kits	2.00 ea		/mh		/ea		4,000		-	-	-	-	2,000.00 /ea	4,000
Cathodic Protection		*/lf*					*81,031*						*/lf*	*81,031*
1008 Station 354+54 to 496+00				**1,975,235**		**3,949,721**	**995,163**			**575,804**				**7,495,922**
1007 Station 496+00 to 520+00														
2240.120 Dewatering														
Wellpoint Dewatering	0.50 mo	24,400.00 /mo	18.00 /mh	12,200	10,500.00 /mo	5,250	-		/mo		-	-	34,900.00 /mo	17,450
Dewatering		*/mo*		*12,200*		*5,250*							*/mo*	*17,450*
2316.150 Rock Excavation														
Rock Excavation, Hydraulic Hoe Ram -Medium	7,365.00 cy	1.25 /cy	236.72 /cd	9,206	-	-	-		2.12 /cy	15,614	-	-	3.37 /cy	24,820

Spreadsheet Level	Takeoff Quantity	Labor Cost/Unit	Labor Price	Labor Amount	Material Price	Material Amount	Sub Amount	Sub Name	Equip Price	Equip Amount	Other Price	Other Amount	Total Cost/Unit	Total Amount
Rock Excavation		*/cy*		*3,206*						*15,614*			*/cy*	*24,820*
2316.155 Rock Blasting														
Rock Blasting-Trench	7,365.00 cy	2.72 /cy	2.72 /cy	20,033	1.95 /cy	14,362	-		2.95 /cy	21,727	/cy		7.62 /cy	56,121
Rock Blasting		*/cy*		*20,033*		*14,362*				*21,727*			*/cy*	*56,121*
2316.202 Pipe Excavation														
Excavate Silt-Clay, Loam, Hydraulic Hoe	820.00 cy	0.94 /cy	140.08 /cd	771	-	-	-		1.60 /cy	1,312	-	-	2.54 /cy	2,083
Backfill and Compact, Machine	7,065.00 cy	1.53 /cy	140.08 /cd	10,809	-	-	-		0.89 /cy	6,288	-	-	2.42 /cy	17,097
Excess Material Offsite	3,200.00 cy	3.30 /cy	140.08 /cd	10,560	-	-	-		2.93 /cy	9,376	-	-	6.23 /cy	19,936
Pipe Excavation		*/cy*		*22,140*						*18,976*			*/cy*	*39,116*
2370.150 Temp Erosion Control														
Erosion Control Mats-Slopes	2,880.00 sf	0.12 /sf	12.08 /ch	348	2.00 /sf	6,336	-		-	-	-	-	2.32 /sf	6,684
Temp Erosion Control		*/sf*		*348*		*6,336*							*/sf*	*6,684*
2446.100 Pipe Bore and Jack														
Pipe Boring 60" Casing, Canal Crossing, Station 501+00	60.00 lf	348.00 /lf	348.00 /lf	20,880	422.00 /lf	25,320			262.00 /lf	15,720	-	-	1,032.00 /lf	61,920
Pipe Boring 60" Casing, Canal Crossing, Station 516+00	60.00 lf	348.00 /lf	348.00 /lf	20,880	422.00 /lf	25,320			262.00 /lf	15,720	-	-	1,032.00 /lf	61,920
Receiving Pits	2.00 ea	450.00 /ea	450.00 /ea	900	1,530.00 /ea	3,060	-		1,580.00 /ea	3,160	-	-	3,560.00 /ea	7,120
Entry Pit	2.00 ea	3,430.00 /ea	3,430.00 /ea	6,860	13,000.00 /ea	26,000	-		13,450.00 /ea	26,900	-	-	29,880.00 /ea	59,760
Pipe Bore and Jack		*/lf*		*49,520*		*79,700*				*61,500*			*/lf*	*190,720*
2502.014 Pipe Bedding														
Utility Bed Gravel-Crushed	2,085.00 cy	3.30 /cy	96.64 /cd	6,881	12.00 /cy	27,522	-		11.70 /cy	24,395	-	-	28.20 /cy	58,797
Pipe Bedding		*/cy*		*6,881*		*27,522*				*24,395*			*/cy*	*58,797*
2580.500 Utility Conflicts														
Replace Utility Connection, Water, Sewer, Telephone, Gas, Electric	5.00 ea	507.00 /ea	507.00 /ea	2,535	500.00 /ea	2,500	-		135.00 /ea	675	-	-	1,142.00 /ea	5,710
Utility Conflicts		*/ea*		*2,535*		*2,500*				*675*			*/ea*	*5,710*
2740.120 Asphalt Paving - SY														
Compacted Base 12"	250.00 sy	-	-	-	-	-	5,233		-	-	-	-	20.93 /sy	5,233
Bituminous Top Course 4"	250.00 sy	-	-	-	-	-	2,000		-	-	-	-	8.00 /sy	2,000
Asphalt Paving - SY		*/sy*					*7,233*						*/sy*	*7,233*
2950.000 SITE RESTORATION														
Restore Landscaping	55.00 msf	30.00 /msf	30.00 /msf	1,650	50.00 /msf	2,750	-		20.00 /msf	1,100	-	-	100.00 /msf	5,500
SITE RESTORATION		*/msf*		*1,650*		*2,750*				*1,100*			*/msf*	*5,500*
15230.301 XH Pipe PE														
48" Steel Pipe, 350 psi, Mortar Lined & Coated	2,400.00 lf	24.50 /lf	16.78 /mh	58,800	208.00 /lf	499,200	-		12.00 /lf	28,800	-	-	244.50 /lf	586,800
Welding per Joint - 48"	54.00 ea	3,612.00 /ea	3,612.00 /ea	195,048	112.50 /ea	6,075	-		90.00 /ea	4,860	-	-	3,814.50 /ea	205,983
XH Pipe PE		*/lf*		*253,848*		*505,275*				*33,660*			*/lf*	*792,783*
15230.314 Pipe Fittings														
48" Pipe Fittings	2.00 ea	750.00 /ea	16.78 /mh	1,500	6,200.00 /ea	12,400	-		155.00 /ea	310	-	-	7,105.00 /ea	14,210

Spreadsheet Level	Takeoff Quantity	Labor Cost/Unit	Labor Price	Labor Amount	Material Price	Material Amount	Sub Amount	Sub Name	Equip Price	Equip Amount	Other Price	Other Amount	Total Cost/Unit	Total Amount
Pipe Fittings		/ea		*1,500*		*12,400*				*310*			/ea	*14,210*
15230.340 Turn Outs, Drains, Air Re														
Air Vacuum/Air Release Vault, 8"	1.00 ea	5,078.00 /ea	5,078.00 /ea	5,078	21,428.00 /ea	21,428	-		757.00 /ea	757	-	-	27,263.00 /ea	27,263
Turn Outs, Drains, Air Re		/ea		*5,078*		*21,428*				*757*			/ea	*27,263*
16151.110 Cathodic Protection														
Cathodic Protection, Impressed Current	2,400.00 lf		/mh		/lf		2,400		-	-	-	-	1.00 /lf	2,400
Joint Seal	54.00 ea		/mh		/ea		6,750		-	-	-	-	125.00 /ea	6,750
Joint Bond	54.00 ea		/mh		/ea		3,240		-	-	-	-	60.00 /ea	3,240
Test Station at 1000 LF	2.00 ea		/mh		/ea		800		-	-	-	-	400.00 /ea	800
Cathodic Protection		/lf					*13,190*						/lf	*13,190*
1007 Station 495+00 to 520+00				**384,939**		**577,523**	**20,423**			**176,713**				**1,259,597**
1008 Station 520+00 to 562+00														
2240.120 Dewatering														
Wellpoint Dewatering	0.80 mo	24,400.00 /mo	18.00 /mh	19,520	10,500.00 /mo	8,400	-		/mo		-	-	34,900.00 /mo	27,920
Dewatering		/mo		*19,520*		*8,400*							/mo	*27,920*
2316.150 Rock Excavation														
Rock Excavation, Hydraulic Hoe Ram -Medium	1,435.00 cy	1.25 /cy	236.72 /cd	1,794	-	-	-		2.12 /cy	3,042	-	-	3.37 /cy	4,836
Rock Excavation		/cy		*1,794*						*3,042*			/cy	*4,836*
2316.155 Rock Blasting														
Rock Blasting-Trench	1,435.00 cy	2.72 /cy	2.72 /cy	3,903	1.95 /cy	2,798	-		2.95 /cy	4,233	/cy		7.62 /cy	10,935
Rock Blasting		/cy		*3,903*		*2,798*				*4,233*			/cy	*10,935*
2316.202 Pipe Excavation														
Excavate Silt-Clay, Loam, Hydraulic Hoe	12,890.00 cy	0.94 /cy	140.08 /cd	12,117	-	-	-		1.60 /cy	20,624	-	-	2.54 /cy	32,741
Backfill and Compact, Machine	12,360.00 cy	1.53 /cy	140.08 /cd	18,911	-	-	-		0.89 /cy	11,000	-	-	2.42 /cy	29,911
Excess Material Offsite	5,600.00 cy	3.30 /cy	140.08 /cd	18,480	-	-	-		2.93 /cy	16,408	-	-	6.23 /cy	34,888
Pipe Excavation		/cy		*49,507*						*48,032*			/cy	*97,540*
2370.150 Temp Erosion Control														
Erosion Control Mats-Slopes	12,600.00 sf	0.12 /sf	12.08 /ch	1,522	2.00 /sf	27,720	-		-	-	-	-	2.32 /sf	29,242
Temp Erosion Control		/sf		*1,522*		*27,720*							/sf	*29,242*
2502.014 Pipe Bedding														
Utility Bed Gravel-Crushed	3,650.00 cy	3.30 /cy	96.64 /cd	12,045	12.00 /cy	48,180	-		11.70 /cy	42,705	-	-	28.20 /cy	102,930
Pipe Bedding		/cy		*12,045*		*48,180*				*42,705*			/cy	*102,930*
2580.500 Utility Conflicts														
Utility Conflicts	5.00 ea	21,125.00 /ea	25.00 /mh	105,625	13,685.00 /ea	68,425	-		5,680.00 /ea	28,400	-	-	40,490.00 /ea	202,450
Replace Utility Connection, Water, Sewer, Telephone, Gas, Electric	40.00 ea	507.00 /ea	507.00 /ea	20,280	500.00 /ea	20,000	-		135.00 /ea	5,400	-	-	1,142.00 /ea	45,680
Utility Conflicts		/ea		*125,905*		*88,425*				*33,800*			/ea	*248,130*
2630.006 Catch Basin 6'														
4" Blow-Off Drainage System, 523+50	1.00 ea		/ch		/ea		***16,900***		/ch		-	-	16,900.00 /ea	16,900

Spreadsheet Level	Takeoff Quantity	Labor Cost/Unit	Labor Price	Labor Amount	Material Price	Material Amount	Sub Amount	Sub Name	Equip Price	Equip Amount	Other Price	Other Amount	Total Cost/Unit	Total Amount
2630.006 Catch Basin 6'														
4" Blow-Off Drainage System, 538+50	1.00 ea		/ch		/ea		***16,900***		/ch		-	-	16,900.00 /ea	16,900
Catch Basin 6'		*/ea*					*33,800*						*/ea*	*33,900*
2740.120 Asphalt Paving - SY														
Compactec Base 12", 4200 LF by 24'	11,200.00 sy	-	-	-	-	-	234,416		-	-	-	-	20.93 /sy	234,416
Bituminous Top Course 4", 4200 LF by 24'	11,200.00 sy	-	-	-	-	-	89,600		-	-	-	-	8.00 /sy	89,600
Asphalt Paving - SY		*/sy*					*324,016*						*/sy*	*324,016*
2770.110 Concrete Curbs & Gutters														
Curb & Gutter, Concrete, Station 520+00 to 540+00	2,000.00 lf	1.95 /lf	53.75 /ch	3,900	7.48 /lf	14,960	-		0.60 /lf	1,200	-	-	10.03 /f	20,060
Concrete Curbs & Gutters		*/ls*		*3,900*		*14,960*				*1,200*			*/ls*	*20,060*
2950.000 SITE RESTORATION														
Restore Landscaping	10.00 msf	30.00 /msf	30.00 /msf	300	50.00 /msf	500	-		20.00 /msf	200	-	-	100.00 /msf	1,000
SITE RESTORATION		*/msf*		*300*		*500*				*200*			*/msf*	*1,000*
3000.150 Concrete Sidewalks and Dr														
20' Wide Driveways	100.00 lf	26.60 /lf	26.60 /lf	2,660	30.40 /lf	3,040			0.40 /lf	40	-	-	57.40 /f	5,740
Concrete Sidewalks and Dr		*/cy*		*2,660*		*3,040*				*40*			*/cy*	*5,740*
15230.301 XH Pipe PE														
48" Steel Pipe, 350 psi, Mortar Lined & Coated	4,200.00 lf	24.50 /lf	16.78 /mh	102,900	207.00 /lf	869,400	-		12.00 /lf	50,400	-	-	243.50 /lf	1,022,700
Welding per Joint - 48"	92.00 ea	3,612.00 /ea	3,612.00 /ea	332,304	112.50 /ea	10,350	-		90.00 /ea	8,280	-	-	3,814.50 /ea	350,934
XH Pipe PE		*/lf*		*435,204*		*879,750*				*56,680*			*/lf*	*1,373,634*
15230.314 Pipe Fittings														
48" Pipe Fittings	2.00 ea	750.00 /ea	16.78 /mh	1,500	6,200.00 /ea	12,400	-		155.00 /ea	310	-	-	7,105.00 /ea	14,210
Pipe Fittings		*/ea*		*1,500*		*12,400*				*310*			*/ea*	*14,210*
15230.340 Turn Outs, Drains, Air Re														
Air Release Vault, 2"	2.00 ea	2,937.00 /ea	2,937.00 /ea	5,874	6,298.00 /ea	12,596	-		479.00 /ea	958	-	-	9,714.00 /ea	19,428
Air Vacuum/Air Release Vault, 8"	1.00 ea	5,078.00 /ea	5,078.00 /ea	5,078	21,428.00 /ea	21,428	-		757.00 /ea	757	-	-	27,263.00 /ea	27,263
Drain Vault, 4" w/AC	2.00 ea	8,997.00 /ea	8,997.00 /ea	17,994	10,341.00 /ea	20,682	-		2,080.00 /ea	4,160	-	-	21,418.00 /ea	42,836
42" Turn Out, 40 cfs, Payson, Station 523+59	1.00 ea	8,840.00 /ea	8,840.00 /ea	8,840	177,700.00 /ea	177,700	23,500		3,380.00 /ea	3,380	-	-	213,420.00 /ea	213,420
Turn Outs, Drains, Air Re		*/ea*		*37,786*		*232,406*	*23,500*			*9,255*			*/ea*	*302,947*
16151.110 Cathodic Protection														
Cathodic Protection, Impressed Current	4,200.00 lf		/mh		/lf		4,200		-	-	-	-	1.00 /lf	4,200
Joint Seal	92.00 ea		/mh		/ea		11,500		-	-	-	-	125.00 /ea	11,500
Joint Bond	92.00 ea		/mh		/ea		5,520		-	-	-	-	60.00 /ea	5,520
Test Station at 1000 LF	4.00 ea		/mh		/ea		1,600		-	-	-	-	400.00 /ea	1,600
Insulating Flange Kits	1.00 ea		/mh		/ea		800		-	-	-	-	800.00 /ea	800
PCR Kits	1.00 ea		/mh		/ea		2,000		-	-	-	-	2,000.00 /ea	2,000
Cathodic Protection		*/lf*					*25,620*						*/lf*	*25,620*
1008 Station 520+00 to 562+00				**695,545**		**1,318,579**	**406,936**			**291,498**				**2,622,559**
1009 Station 562+00 to 594+00														
2240.120 Dewatering														

Spreadsheet Level	Takeoff Quantity	Labor Cost/Unit	Labor Price	Labor Amount	Material Price	Material Amount	Sub Amount	Sub Name	Equip Price	Equip Amount	Other Price	Other Amount	Total Cost/Unit	Total Amount
2240.120 Dewatering														
Wellpoint Dewatering	0.60 mo	24,400.00 /mo	18.00 /mh	14,640	10,500.00 /mo	6,300	-		/mo		-	-	34,900.00 /mo	20,940
Dewatering		*/mo*		*14,640*		*6,300*							*/mo*	*20,940*
2315.202 Pipe Excavation														
Excavate Silt-Clay, Loam, Hycraulic Hoe	10,920.00 cy	0.94 /cy	140.08 /cd	10,265	-	-	-		1.60 /cy	17,472	-	-	2.54 /cy	27,737
Backfill and Compact, Machine	9,415.00 cy	1.53 /cy	140.08 /cd	14,405	-	-	-		0.89 /cy	8,379	-	-	2.42 /cy	22,784
Excess Material Offsite	4,270.00 cy	3.30 /cy	140.08 /cd	14,091	-	-	-		2.93 /cy	12,511	-	-	6.23 /cy	26,602
Pipe Excavation		*/cy*		*38,761*		*-*				*38,362*			*/cy*	*77,123*
2370.150 Temp Erosion Control														
Erosion Control Mats-Slopes	9,600.00 sf	0.12 /sf	12.08 /ch	1,160	2.00 /sf	21,120	-		-	-	-	-	2.32 /sf	22,280
Temp Erosion Control		*/sf*		*1,160*		*21,120*							*/sf*	*22,280*
2502.014 Pipe Bedding														
Utility Bed Gravel-Crushed	2,780.00 cy	3.30 /cy	96.64 /cd	9,174	12.00 /cy	36,696	-		11.70 /cy	32,526	-	-	28.20 /cy	78,396
Pipe Bedding		*/cy*		*9,174*		*36,696*				*32,526*			*/cy*	*78,396*
2580.500 Utility Conflicts														
Utility Conflicts	5.00 ea	21,125.00 /ea	25.00 /mh	105,625	13,685.00 /ea	68,425	-		5,680.00 /ea	28,400	-	-	40,490.00 /ea	202,450
Replace Utility Connection, Water, Sewer, Telephone, Gas, Electric	25.00 ea	507.00 /ea	507.00 /ea	12,675	500.00 /ea	12,500	-		135.00 /ea	3,375	-	-	1,142.00 /ea	28,550
Utility Conflicts		*/ea*		*118,300*		*80,925*				*31,775*			*/ea*	*231,000*
2630.006 Catch Basin 6'														
4" Blow-Off Drainage System, 576+00	1.00 ea		/ch		/ea		***16,900***		/ch		-	-	16,900.00 /ea	16,900
Catch Basin 6'		*/ea*					*16,900*						*/ea*	*16,900*
2740.120 Asphalt Paving - SY														
Compacted Base 12", 3200 LF by 24'	8,535.00 sy	-	-	-	-	-	178,638		-	-	-	-	20.93 /sy	178,638
Bituminous Top Course 4", 3200 LF by 24'	8,535.00 sy	-	-	-	-	-	68,280		-	-	-	-	8.00 /sy	68,280
Asphalt Paving - SY		*/sy*					*246,918*						*/sy*	*246,918*
2770.110 Concrete Curbs & Gutters														
Curb & Gutter, Concrete, Station 570+00 to 594+00	2,400.00 lf	1.95 /lf	53.75 /ch	4,680	7.48 /lf	17,952	-		0.60 /lf	1,440	-	-	10.03 /lf	24,072
Concrete Curbs & Gutters		*/ls*		*4,680*		*17,952*				*1,440*			*/ls*	*24,072*
2950.000 SITE RESTORATION														
Restore Landscaping	10.00 msf	30.00 /msf	30.00 /msf	300	50.00 /msf	500	-		20.00 /msf	200	-	-	100.00 /msf	1,000
SITE RESTORATION		*/msf*		*300*		*500*				*200*			*/msf*	*1,000*
15230.301 XH Pipe PE														
48" Steel Pipe, 350 psi, Mortar Lined & Coated	3,200.00 lf	24.50 /lf	16.78 /mh	78,400	207.00 /lf	662,400	-		12.00 /lf	38,400	-	-	243.50 /lf	779,200
Welding per Joint - 48"	71.00 ea	3,612.00 /ea	3,612.00 /ea	256,452	112.50 /ea	7,988	-		90.00 /ea	6,390	-	-	3,814.50 /ea	270,830
XH Pipe PE		*/lf*		*334,852*		*670,388*				*44,790*			*/lf*	*1,050,029*
15230.314 Pipe Fittings														
48" Pipe Fittings	2.00 ea	750.00 /ea	16.78 /mh	1,500	6,200.00 /ea	12,400	-		155.00 /ea	310	-	-	7,105.00 /ea	14,210

Spreadsheet Level	Takeoff Quantity	Labor Cost/Unit	Labor Price	Labor Amount	Material Price	Material Amount	Sub Amount	Sub Name	Equip Price	Equip Amount	Other Price	Other Amount	Total Cost/Unit	Total Amount
Pipe Fittings		*/ea*		*1,500*		*12,400*				*310*			*/ea*	*14,210*
15230.340 Turn Outs, Drains, Air Re														
Air Release Vault, 2"	1.00 ea	2,937.00 /ea	2,937.00 /ea	2,937	6,298.00 /ea	6,298	-		479.00 /ea	479	-	-	9,714.00 /ea	9,714
Air Vacuum/Air Release Vault, 8"	2.00 ea	5,078.00 /ea	5,078.00 /ea	10,156	21,428.00 /ea	42,856	-		757.00 /ea	1,514	-	-	27,263.00 /ea	54,526
Drain Vault, 4"	1.00 ea	8,997.00 /ea	8,997.00 /ea	8,997	11,041.00 /ea	11,041	-		2,080.00 /ea	2,080	-	-	22,118.00 /ea	22,118
Turn Outs, Drains, Air Re		*/ea*		*22,090*		*60,195*				*4,073*			*/ea*	*86,358*
16151.110 Cathodic Protection														
Cathodic Protection, Impressed Current	3,200.00 lf		/mh		/lf		3,200		-	-	-	-	1.00 /lf	3,200
Joint Seal	71.00 ea		/mh		/ea		8,875		-	-	-	-	125.00 /ea	8,875
Joint Bond	71.00 ea		/mh		/ea		4,260		-	-	-	-	60.00 /ea	4,260
Test Station at 1000 LF	3.00 ea		/mh		/ea		1,200		-	-	-	-	400.00 /ea	1,200
Cathodic Protection		*/lf*					*17,535*						*/lf*	*17,535*
1009 Station 562+00 to 594+00				**545,456**		**906,476**	**281,353**			**153,476**				**1,886,761**
1010 Station 594+00 to 752+00														
2240.120 Dewatering														
Wellpoint Dewatering	6.00 mo	24,400.00 /mo	18.00 /mh	146,400	10,500.00 /mo	63,000	-		/mo		-	-	34,900.00 /mo	209,400
Dewatering		*/mo*		*146,400*		*63,000*							*/mo*	*209,400*
2316.202 Pipe Excavation														
Excavate Silt-Clay, Loam, Hydraulic Hoe	53,860.00 cy	0.94 /cy	140.08 /cd	50,628	-	-	-		1.60 /cy	86,176	-	-	2.54 /cy	136,804
Backfill and Compact, Machine	46,490.00 cy	1.53 /cy	140.08 /cd	71,130	-	-	-		0.89 /cy	41,376	-	-	2.42 /cy	112,506
Excess Material Offsite	21,070.00 cy	3.30 /cy	140.08 /cd	69,531	-	-	-		2.93 /cy	61,735	-	-	6.23 /cy	131,266
Pipe Excavation		*/cy*		*191,289*						*189,287*			*/cy*	*380,576*
2370.150 Temp Erosion Control														
Erosion Control Mats-Slopes	47,400.00 sf	0.12 /sf	12.08 /ch	5,726	2.00 /sf	104,280	-		-	-	-	-	2.32 /sf	110,006
Temp Erosion Control		*/sf*		*5,726*		*104,280*							*/sf*	*110,006*
2446.100 Pipe Bore and Jack														
Pipe Boring, 60" Casing, Creek Crossing, Station 691+00	100.00 lf	348.00 /lf	348.00 /lf	34,800	422.00 /lf	42,200			262.00 /lf	26,200	-	-	1,032.00 /lf	103,200
Pipe Boring, 60" Casing, HWY 6/SR 198 Crossing, Station 710+00	100.00 lf	348.00 /lf	348.00 /lf	34,800	422.00 /lf	42,200			262.00 /lf	26,200	-	-	1,032.00 /lf	103,200
Pipe Boring, 60" Casing, I-15 Crossing, Station 742+00	180.00 lf	348.00 /lf	348.00 /lf	62,640	422.00 /lf	75,960			262.00 /lf	47,160	-	-	1,032.00 /lf	185,760
Receiving Pits	3.00 ea	450.00 /ea	450.00 /ea	1,350	1,530.00 /ea	4,590	-		1,580.00 /ea	4,740	-	-	3,560.00 /ea	10,680
Entry Pit	3.00 ea	3,430.00 /ea	3,430.00 /ea	10,290	13,000.00 /ea	39,000	-		13,450.00 /ea	40,350	-	-	29,880.00 /ea	89,640
Pipe Bore and Jack		*/lf*		*143,890*		*203,950*				*144,650*			*/lf*	*492,490*
2502.014 Pipe Bedding														
Utility Bed Gravel-Crushed	13,720.00 cy	3.30 /cy	96.64 /cd	45,276	12.00 /cy	181,104	-		11.70 /cy	160,524	-	-	28.20 /cy	386,904
Pipe Bedding		*/cy*		*45,276*		*181,104*				*160,524*			*/cy*	*386,904*
2580.500 Utility Conflicts														
Utility Conflicts	5.00 ea	21,125.00 /ea	25.00 /mh	105,625	13,685.00 /ea	68,425	-		5,680.00 /ea	28,400	-	-	40,490.00 /ea	202,450

Spreadsheet Level	Takeoff Quantity	Labor Cost/Unit	Labor Price	Labor Amount	Material Price	Material Amount	Sub Amount	Sub Name	Equip Price	Equip Amount	Other Price	Other Amount	Total Cost/Unit	Total Amount
2580.500 Utility Conflicts														
Replace Utility Connection, Water, Sewer, Telephone, Gas, Electric	60.00 ea	507.00 /ea	507.00 /ea	30,420	500.00 /ea	30,000	-		135.00 /ea	8,100	-	-	1,142.00 /ea	68,520
Utility Conflicts		*/ea*		*136,945*		*98,425*				*36,500*			*/ea*	*270,970*
2630.006 Catch Basin 6'														
4" Blow-Off Drainage System, 625+00	1.00 ea		/ch		/ea		***9,600***		/ch		-	-	9,600.00 /ea	9,600
4" Blow-Off Drainage System, 638+00	1.00 ea		/ch		/ea		***16,900***		/ch		-	-	16,900.00 /ea	16,900
4" Blow-Off Drainage System, 687+00	1.00 ea		/ch		/ea		***9,600***		/ch		-	-	9,600.00 /ea	9,600
Catch Basin 6'		*/ea*					*36,100*						*/ea*	*36,100*
2740.120 Asphalt Paving - SY														
Compacted Base 12", 15800 LF by 24'	42,130.00 sy	-	-	-	-	-	881,781		-	-	-	-	20.93 /sy	881,781
Bituminous Top Course 4", 6100 LF by 24'	16,270.00 sy	-	-	-	-	-	130,160		-	-	-	-	8.00 /sy	130,160
Wear Course 1 1/2", 9700 LF by 24'	25,860.00 sy	0.35 /sy	0.35 /sy	9,051	2.41 /sy	62,323			0.25 /sy	6,465	-	-	3.01 /sy	77,839
Bituminous Top Course 6", 9700 LF by 24'	25,860.00 sy	0.76 /sy	0.76 /sy	19,654	8.45 /sy	218,517			0.55 /sy	14,223	-	-	9.76 /sy	252,394
Asphalt Paving - SY		*/sy*		*28,705*		*280,840*	*1,011,941*			*20,688*			*/sy*	*1,342,173*
2770.110 Concrete Curbs & Gutters														
Curb & Gutter, Concrete, Station 594+00 to 630+00	3,600.00 lf	1.95 /lf	53.75 /ch	7,020	7.48 /lf	26,928	-		0.60 /lf	2,160	-	-	10.03 /lf	36,108
Concrete Curbs & Gutters		*/ls*		*7,020*		*26,928*				*2,160*			*/ls*	*36,108*
2850.000 SITE RESTORATION														
Restore Landscaping	20.00 msf	30.00 /msf	30.00 /msf	600	50.00 /msf	1,000	-		20.00 /msf	400	-	-	100.00 /msf	2,000
SITE RESTORATION		*/msf*		*600*		*1,000*				*400*			*/msf*	*2,000*
3000.150 Concrete Sidewalks and Dr														
20' Wide Driveways	260.00 lf	26.60 /lf	26.60 /lf	6,916	30.40 /lf	7,904			0.40 /lf	104	-	-	57.40 /lf	14,924
Concrete Sidewalks and Dr		*/cy*		*6,916*		*7,904*				*104*			*/cy*	*14,924*
15230.301 XH Pipe PE														
48" Steel Pipe, 400 psi, Mortar Lined & Coated	15,800.00 lf	24.50 /lf	16.78 /mh	387,100	218.00 /lf	3,444,400	-		12.00 /lf	189,600	-	-	254.50 /lf	4,021,100
Welding per Joint - 48"	336.00 ea	3,612.00 /ea	3,612.00 /ea	1,213,632	112.50 /ea	37,800	-		90.00 /ea	30,240	-	-	3,814.50 /ea	1,281,672
XH Pipe PE		*/lf*		*1,600,732*		*3,482,200*				*219,840*			*/lf*	*5,302,772*
15230.314 Pipe Fittings														
48" Pipe Fittings	4.00 ea	750.00 /ea	16.78 /mh	3,000	6,200.00 /ea	24,800	-		155.00 /ea	620	-	-	7,105.00 /ea	28,420
Pipe Fittings		*/ea*		*3,000*		*24,800*				*620*			*/ea*	*28,420*
15230.340 Turn Outs, Drains, Air Re														
Air Release Vault, 2"	8.00 ea	2,937.00 /ea	2,937.00 /ea	23,496	6,298.00 /ea	50,384	-		479.00 /ea	3,832	-	-	9,714.00 /ea	77,712
Air Vacuum/Air Release Vault, 8"	2.00 ea	5,078.00 /ea	5,078.00 /ea	10,156	21,428.00 /ea	42,856	-		757.00 /ea	1,514	-	-	27,263.00 /ea	54,526
Drain Vault, 4"	2.00 ea	8,997.00 /ea	8,997.00 /ea	17,994	11,041.00 /ea	22,082	-		2,080.00 /ea	4,160	-	-	22,118.00 /ea	44,236
Drain Vault, 4" w/AC	1.00 ea	8,997.00 /ea	8,997.00 /ea	8,997	11,341.00 /ea	11,341	-		2,080.00 /ea	2,080	-	-	22,418.00 /ea	22,418

Spreadsheet Level	Takeoff Quantity	Labor Cost/Unit	Labor Price	Labor Amount	Material Price	Material Amount	Sub Amount	Sub Name	Equip Price	Equip Amount	Other Price	Other Amount	Total Cost/Unit	Total Amount
Turn Outs, Drains, Air Re		/ea		*50,643*		*126,663*				*11,586*			/ea	*198,892*
16151.110 Cathodic Protection														
Cathodic Protection, Impressed Current	15,800.00 lf		/mh		/lf		15,800		-	-	-	-	1.00 /lf	15,800
Joint Seal	336.00 ea		/mh		/ea		42,000		-	-	-	-	125.00 /ea	42,000
Joint Bond	336.00 ea		/mh		/ea		20,160		-	-	-	-	60.00 /ea	20,160
Test Station at 1000 LF	16.00 ea		/mh		/ea		6,400		-	-	-	-	400.00 /ea	6,400
Cathodic Protection		/lf					*84,360*						/lf	*84,360*
1010 Station 594+00 to 752+00				**2,376,231**		**4,601,094**	**1,132,401**			**786,359**				**8,896,085**
1011 Station 752+00 to 790+80														
2240.120 Dewatering														
Wellpoint Dewatering	1.50 mo	24,400.00 /mo	18.00 /mh	36,600	10,500.00 /mo	15,750	-		/mo		-	-	34,900.00 /mo	52,350
Dewatering		*/mo*		*36,600*		*15,750*							*/mo*	*52,350*
2316.202 Pipe Excavation														
Excavate Silt-Clay, Loam, Hydraulic Hoe	26,590.00 cy	0.94 /cy	140.08 /cd	24,995	-	-	-		1.60 /cy	42,544	-	-	2.54 /cy	67,539
Backfill and Compact, Machine	11,480.00 cy	1.53 /cy	140.08 /cd	17,564	-	-	-		0.89 /cy	10,217	-	-	2.42 /cy	27,782
Excess Material Offsite	5,200.00 cy	3.30 /cy	140.08 /cd	17,160	-	-	-		2.93 /cy	15,236	-	-	6.23 /cy	32,396
Pipe Excavation		*/cy*		*59,719*						*67,997*			*/cy*	*127,716*
2370.150 Temp Erosion Control														
Erosion Control Mats-Slopes	11,700.00 sf	0.12 /sf	12.08 /ch	1,413	2.00 /sf	25,740	-		-	-	-	-	2.32 /sf	27,153
Temp Erosion Control		*/sf*		*1,413*		*25,740*							*/sf*	*27,153*
2502.014 Pipe Bedding														
Utility Bed Gravel-Crushed	3,390.00 cy	3.30 /cy	96.64 /cd	11,187	12.00 /cy	44,748	-		11.70 /cy	39,663	-	-	28.20 /cy	95,598
Pipe Bedding		*/cy*		*11,187*		*44,748*				*39,663*			*/cy*	*95,598*
2580.500 Utility Conflicts														
Utility Conflicts	2.00 ea	21,125.00 /ea	25.00 /mh	42,250	13,685.00 /ea	27,370	-		5,680.00 /ea	11,360	-	-	40,490.00 /ea	80,980
Utility Conflicts		*/ea*		*42,250*		*27,370*				*11,360*			*/ea*	*80,980*
2740.120 Asphalt Paving - SY														
Compacted Base 12", 3880 LF by 24'	10,350.00 sy	-	-	-	-	-	216,626		-	-	-	-	20.93 /sy	216,626
Bituminous Top Course 4", 3880 LF by 24'	10,350.00 sy	-	-	-	-	-	82,800		-	-	-	-	8.00 /sy	82,800
Asphalt Paving - SY		*/sy*					*299,426*						*/sy*	*299,426*
2950.000 SITE RESTORATION														
Restore Landscaping	10.00 msf	30.00 /msf	30.00 /msf	300	50.00 /msf	500	-		20.00 /msf	200	-	-	100.00 /msf	1,000
SITE RESTORATION		*/msf*		*300*		*500*				*200*			*/msf*	*1,000*
15230.301 XH Pipe PE														
48" Steel Pipe, 350 psi, Mortar Lined & Coated	3,880.00 lf	24.50 /lf	16.78 /mh	95,060	207.00 /lf	803,160	-		12.00 /lf	46,560	-	-	243.50 /lf	944,780
Welding per Joint - 48"	85.00 ea	3,612.00 /ea	3,612.00 /ea	307,020	112.50 /ea	9,563	-		90.00 /ea	7,650	-	-	3,814.50 /ea	324,233
XH Pipe PE		*/lf*		*402,080*		*812,723*				*54,210*			*/lf*	*1,269,012*
15230.314 Pipe Fittings														
48" Pipe Fittings	2.00 ea	750.00 /ea	16.78 /mh	1,500	6,200.00 /ea	12,400	-		155.00 /ea	310	-	-	7,105.00 /ea	14,210
Pipe Fittings		*/ea*		*1,500*		*12,400*				*310*			*/ea*	*14,210*

Spreadsheet Level	Takeoff Quantity	Labor Cost/Unit	Labor Price	Labor Amount	Material Price	Material Amount	Sub Amount	Sub Name	Equip Price	Equip Amount	Other Price	Other Amount	Total Cost/Unit	Total Amount
15230.340 Turn Outs, Drains, Air Re														
Air Release Vault, 2"	3.00 ea	2,937.00 /ea	2,937.00 /ea	8,811	6,298.00 /ea	18,894	-		479.00 /ea	1,437	-	-	9,714.00 /ea	29,142
36" Turn Out, 40 c's, West Payson, Station 790+80	1.00 ea	7,579.00 /ea	7,579.00 /ea	7,579	157,107.00 /ea	157,107	23,500		3,187.00 /ea	3,187	-	-	191,373.00 /ea	191,373
Turn Outs, Drains, Air Re		*/ea*		*15,390*		*176,001*	*23,500*			*4,624*			*/ea*	*220,515*
16151.110 Cathodic Protection														
Cathodic Protection, Impressed Current	3,880.00 lf		/mh		/lf		3,880		-	-	-	-	1.00 /lf	3,880
Joint Seal	85.00 ea		/mh		/ea		10,625		-	-	-	-	125.00 /ea	10,625
Joint Bond	85.00 ea		/mh		/ea		5,100		-	-	-	-	60.00 /ea	5,100
Test Station at 1000 LF	4.00 ea		/mh		/ea		1,600		-	-	-	-	400.00 /ea	1,600
Insulating Flange Kits	1.00 ea		/mh		/ea		800		-	-	-	-	800.00 /ea	800
PCR Kits	1.00 ea		/mh		/ea		2,000		-	-	-	-	2,000.00 /ea	2,000
Cathodic Protection		*/lf*					*24,005*						*/lf*	*24,005*
1011 Station 752+00 to 790+80				**571,439**		**1,115,232**	**345,931**			**178,364**				**2,211,965**
1012 Station 790+80 to 858+00														
2240.120 Dewatering														
Wellpoint Dewatering	1.30 mo	24,400.00 /mo	18.00 /mh	31,720	10,500.00 /mo	13,650	-		/mo		-	-	34,900.00 /mo	45,370
Dewatering		*/mo*		*31,720*		*13,650*							*/mo*	*45,370*
2316.202 Pipe Excavation														
Excavate Silt-Clay, Loam, Hydraulic Hoe	20,910.00 cy	0.94 /cy	140.08 /cd	19,655	-	-	-		1.60 /cy	33,456	-	-	2.54 /cy	53,111
Backfill and Compact, Machine	18,520.00 cy	1.53 /cy	140.08 /cd	28,336	-	-	-		0.89 /cy	16,483	-	-	2.42 /cy	44,818
Excess Material Offsite	7,505.00 cy	3.30 /cy	140.08 /cd	24,767	-	-	-		2.93 /cy	21,990	-	-	6.23 /cy	46,756
Pipe Excavation		*/cy*		*72,758*						*71,929*			*/cy*	*144,686*
2370.150 Temp Erosion Control														
Erosion Control Mats-Slopes	20,100.00 sf	0.12 /sf	12.08 /ch	2,428	2.00 /sf	44,220	-		-	-	-	-	2.32 /sf	46,648
Temp Erosion Control		*/sf*		*2,428*		*44,220*							*/sf*	*46,648*
2446.100 Pipe Bore and Jack														
Pipe Boring 54" Casing, Canal Crossing, Station 800+00	60.00 lf	170.00 /lf	170.00 /lf	10,200	150.00 /lf	9,000			115.00 /lf	6,900	-	-	435.00 /lf	26,100
Receiving Pits	1.00 ea	450.00 /ea	450.00 /ea	450	1,530.00 /ea	1,530	-		1,580.00 /ea	1,580	-	-	3,560.00 /ea	3,560
Entry Pit	1.00 ea	3,430.00 /ea	3,430.00 /ea	3,430	13,000.00 /ea	13,000	-		13,450.00 /ea	13,450	-	-	29,880.00 /ea	29,880
Pipe Bore and Jack		*/lf*		*14,080*		*23,530*				*21,930*			*/lf*	*59,540*
2502.014 Pipe Bedding														
Utility Bed Gravel-Crushed	5,120.00 cy	3.30 /cy	96.64 /cd	16,896	12.00 /cy	67,584	-		11.70 /cy	59,904	-	-	28.20 /cy	144,384
Pipe Bedding		*/cy*		*16,896*		*67,584*				*59,904*			*/cy*	*144,384*
2630.006 Catch Basin 6'														
4" Blow-Off Drainage System, 800+00	1.00 ea		/ch		/ea		***9,150***		/ch		-	-	9,150.00 /ea	9,150
Catch Basin 6'		*/ea*					*9,150*						*/ea*	*9,150*
2740.120 Asphalt Paving - SY														
Compacted Base 12", Road Crossings	250.00 sy	-	-	-	-	-	5,233		-	-	-	-	20.93 /sy	5,233

Spreadsheet Level	Takeoff Quantity	Labor Cost/Unit	Labor Price	Labor Amount	Material Price	Material Amount	Sub Amount	Sub Name	Equip Price	Equip Amount	Other Price	Other Amount	Total Cost/Unit	Total Amount
2740.120 Asphalt Paving - SY														
Bituminous Top Course 4", Road Crossings	250.00 sy	-	-	-	-	-	2,000		-	-	-	-	8.00 /sy	2,000
Asphalt Paving - SY		*/sy*					*7,233*						*/sy*	*7,233*
2950.000 SITE RESTORATION														
Restore Landscaping	154.00 msf	30.00 /msf	30.00 /msf	4,620	50.00 /msf	7,700	-		20.00 /msf	3,080	-	-	100.00 /msf	15,400
SITE RESTORATION		*/msf*		*4,620*		*7,700*				*3,080*			*/msf*	*15,400*
15230.301 XH Pipe PE														
42" Steel Pipe, 350 psi, Mortar Lined & Coated	6,720.00 lf	24.50 /lf	16.78 /mh	164,640	162.00 /lf	1,088,640	-		12.00 /lf	80,640	-	-	198.50 /lf	1,333,920
Welding per Joint - 42"	170.00 ea	2,493.00 /ea	2,493.00 /ea	423,810	100.00 /ea	17,000	-		80.00 /ea	13,600	-	-	2,673.00 /ea	454,410
XH Pipe PE		*/lf*		*588,450*		*1,105,640*				*94,240*			*/lf*	*1,788,330*
15230.314 Pipe Fittings														
42" Pipe Fittings	144.00 ea	750.00 /ea	16.78 /mh	108,000	5,200.00 /ea	748,800	-		155.00 /ea	22,320	-	-	6,105.00 /ea	879,120
Pipe Fittings		*/ea*		*108,000*		*748,800*				*22,320*			*/ea*	*879,120*
15230.340 Turn Outs, Drains, Air Re														
Air Release Vault, 2"	3.00 ea	2,937.00 /ea	2,937.00 /ea	8,811	6,298.00 /ea	18,894	-		479.00 /ea	1,437	-	-	9,714.00 /ea	29,142
Air Vacuum/Air Release Vault, 8"	1.00 ea	5,078.00 /ea	5,078.00 /ea	5,078	21,428.00 /ea	21,428	-		757.00 /ea	757	-	-	27,263.00 /ea	27,263
Drain Vault, 4"	1.00 ea	8,997.00 /ea	8,997.00 /ea	8,997	11,041.00 /ea	11,041	-		2,080.00 /ea	2,080	-	-	22,118.00 /ea	22,118
Turn Outs, Drains, Air Re		*/ea*		*22,886*		*51,363*				*4,274*			*/ea*	*79,523*
16151.110 Cathodic Protection														
Cathodic Protection, Impressed Current	6,720.00 lf		/mh		/lf		6,720		-	-	-	-	1.00 /lf	6,720
Joint Seal	144.00 ea		/mh		/ea		18,000		-	-	-	-	125.00 /ea	18,000
Joint Bond	144.00 ea		/mh		/ea		8,640		-	-	-	-	60.00 /ea	8,640
Test Station at 1000 LF	7.00 ea		/mh		/ea		2,800		-	-	-	-	400.00 /ea	2,800
Cathodic Protection		*/lf*					*36,160*						*/lf*	*36,160*
1012 Station 790+80 to 858+00				**861,837**		**2,062,487**	**52,543**			**277,575**				**3,254,543**
1013 Station 858+00 to 876+00														
2240.120 Dewatering														
Wellpoint Dewatering	0.50 mo	24,400.00 /mo	18.00 /mh	12,200	10,500.00 /mo	5,250	-		/mo		-	-	34,900.00 /mo	17,450
Dewatering		*/mo*		*12,200*		*5,250*							*/mo*	*17,450*
2316.202 Pipe Excavation														
Excavate Silt-Clay, Loam, Hycraulic Hoe	5,630.00 cy	0.94 /cy	140.08 /cd	5,292	-	-	-		1.60 /cy	9,008	-	-	2.54 /cy	14,300
Backfill and Compact, Machine	4,980.00 cy	1.53 /cy	140.08 /cd	7,619	-	-	-		0.89 /cy	4,432	-	-	2.42 /cy	12,052
Excess Material Offsite	2,020.00 cy	3.30 /cy	140.08 /cd	6,666	-	-	-		2.93 /cy	5,919	-	-	6.23 /cy	12,585
Pipe Excavation		*/cy*		*19,578*						*19,359*			*/cy*	*38,936*
2370.150 Temp Erosion Control														
Erosion Control Mats-Slopes	5,400.00 sf	0.12 /sf	12.08 /ch	652	2.00 /sf	11,880	-		-	-	-	-	2.32 /sf	12,532
Temp Erosion Control		*/sf*		*652*		*11,880*							*/sf*	*12,532*
2502.014 Pipe Bedding														
Utility Bed Gravel-Crushed	1,380.00 cy	3.30 /cy	96.64 /cd	4,554	12.00 /cy	18,216	-		11.70 /cy	16,146	-	-	28.20 /cy	38,916
Pipe Bedding		*/cy*		*4,554*		*18,216*				*16,146*			*/cy*	*38,916*

Spreadsheet Level	Takeoff Quantity	Labor Cost/Unit	Labor Price	Labor Amount	Material Price	Material Amount	Sub Amount	Sub Name	Equip Price	Equip Amount	Other Price	Other Amount	Total Cost/Unit	Total Amount
2740.120 Asphalt Paving - SY														
Compacted Base 12", Road Crossings	300.00 sy	-	-	-	-	-	6,279		-	-	-	-	20.93 /sy	6,279
Bituminous Top Course 4", Road Crossings	250.00 sy	-	-	-	-	-	2,000		-	-	-	-	8.00 /sy	2,000
Asphalt Paving - SY		*/sy*					*8,279*						*/sy*	*8,279*
2950.000 SITE RESTORATION														
Restore Landscaping	41.00 msf	30.00 /msf	30.00 /msf	1,230	50.00 /msf	2,050	-		20.00 /msf	820	-	-	100.00 /msf	4,100
SITE RESTORATION		*/msf*		*1,230*		*2,050*				*820*			*/msf*	*4,100*
15230.301 XH Pipe PE														
42" Steel Pipe, 300 psi, Mortar Lined & Coated	1,800.00 lf	24.50 /lf	16.78 /mh	44,100	154.00 /lf	277,200	-		12.00 /lf	21,600	-	-	190.50 /lf	342,900
Welding per Joint - 42"	42.00 ea	2,493.00 /ea	2,493.00 /ea	104,706	100.00 /ea	4,200	-		80.00 /ea	3,360	-	-	2,673.00 /ea	112,266
XH Pipe PE		*/lf*		*148,806*		*281,400*				*24,960*			*/lf*	*455,166*
15230.314 Pipe Fittings														
42" Pipe Fittings	2.00 ea	750.00 /ea	16.76 /mh	1,500	5,200.00 /ea	10,400	-		155.00 /ea	310	-	-	6,105.00 /ea	12,210
Pipe Fittings		*/ea*		*1,500*		*10,400*				*310*			*/ea*	*12,210*
15230.340 Turn Outs, Drains, Air Re														
Air Release Vault, 2"	1.00 ea	2,937.00 /ea	2,937.00 /ea	2,937	6,298.00 /ea	6,298	-		479.00 /ea	479	-	-	9,714.00 /ea	9,714
24" Turn Out, 10 cfs, Geno'a	1.00 ea	6,905.00 /ea	6,905.00 /ea	6,905	94,793.00 /ea	94,793	23,500		3,069.00 /ea	3,069	-	-	128,267.00 /ea	128,267
Turn Outs, Drains, Air Re		*/ea*		*9,842*		*101,091*	*23,500*			*3,548*			*/ea*	*137,981*
16151.110 Cathodic Protection														
Cathodic Protection, Impressed Current	1,800.00 lf		/mh		/lf		1,800		-	-	-	-	1.00 /lf	1,800
Joint Seal	42.00 ea		/mh		/ea		5,250		-	-	-	-	125.00 /ea	5,250
Joint Bond	42.00 ea		/mh		/ea		2,520		-	-	-	-	60.00 /ea	2,520
Test Station at 1000 LF	2.00 ea		/mh		/ea		800		-	-	-	-	400.00 /ea	800
Insulating Flange Kits	1.00 ea		/mh		/ea		800		-	-	-	-	800.00 /ea	800
PCR Kits	1.00 ea		/mh		/ea		2,000		-	-	-	-	2,000.00 /ea	2,000
Cathodic Protection		*/lf*					*13,170*						*/lf*	*13,170*
1013 Station 858+00 to 876+00				**198,362**		**439,287**	**44,949**			**65,143**				**738,741**
1014 Station 876+00 to 932+75														
2240.120 Dewatering														
Well point Dewatering	2.00 mo	24,400.00 /mo	18.00 /mh	48,800	10,500.00 /mo	21,000	-		/mo		-	-	34,900.00 /mo	69,800
Dewatering		*/mo*		*48,800*		*21,000*							*/mo*	*69,800*
2316.202 Pipe Excavation														
Excavate Silt-Clay, Loam, Hydraulic Hoe	17,720.00 cy	0.94 /cy	140.08 /cd	16,657	-	-	-		1.60 /cy	28,352	-	-	2.54 /cy	45,009
Backfill and Compact, Machine	15,685.00 cy	1.53 /cy	140.08 /cd	23,998	-	-	-		0.89 /cy	13,960	-	-	2.42 /cy	37,958
Excess Material Offsite	6,452.00 cy	3.30 /cy	140.08 /cd	21,292	-	-	-		2.93 /cy	18,904	-	-	6.23 /cy	40,196
Pipe Excavation		*/cy*		*61,946*						*61,216*			*/cy*	*123,162*
2370.150 Temp Erosion Control														
Erosion Control Mats-Slopes	17,030.00 sf	0.12 /sf	12.08 /ch	2,057	2.00 /sf	37,466	-		-	-	-	-	2.32 /sf	39,523
Temp Erosion Control		*/sf*		*2,057*		*37,466*							*/sf*	*39,523*

Spreadsheet Level	Takeoff Quantity	Labor Cost/Unit	Labor Price	Labor Amount	Material Price	Material Amount	Sub Amount	Sub Name	Equip Price	Equip Amount	Other Price	Other Amount	Total Cost/Unit	Total Amount
2445.100 Pipe Bore and Jack														
Pipe Boring 54" Casing, HWY Crossing, Station 882+00	150.00 lf	170.00 /lf	170.00 /lf	25,500	135.00 /lf	20,250			115.00 /lf	17,250	-	-	420.00 /lf	63,000
Receiving Pits	1.00 ea	450.00 /ea	450.00 /ea	450	1,530.00 /ea	1,530	-		1,580.00 /ea	1,580	-	-	3,560.00 /ea	3,560
Entry Pit	1.00 ea	3,430.00 /ea	3,430.00 /ea	3,430	13,000.00 /ea	13,000	-		13,450.00 /ea	13,450	-	-	29,880.00 /ea	29,880
Pipe Bore and Jack		*/lf*		*29,380*		*34,780*				*32,280*			*/lf*	*96,440*
2502.014 Pipe Bedding														
Utility Bed Gravel-Crushed	4,345.00 cy	3.30 /cy	96.64 /cd	14,339	12.00 /cy	57,354	-		11.70 /cy	50,837	-	-	28.20 /cy	122,529
Pipe Bedding		*/cy*		*14,339*		*57,354*				*50,837*			*/cy*	*122,529*
2580.500 Utility Conflicts														
Utility Conflicts	2.00 ea	21,125.00 /ea	25.00 /mh	42,250	13,685.00 /ea	27,370	-		5,680.00 /ea	11,360	-	-	40,490.00 /ea	80,980
Utility Conflicts		*/ea*		*42,250*		*27,370*				*11,360*			*/ea*	*80,980*
2630.006 Catch Basin 6'														
4" Blow-Off Drainage System, 880+50	1.00 ea		/ch		/ea		***8,920***		/ch		-	-	8,920.00 /ea	8,920
Catch Basin 6'		*/ea*					*8,920*						*/ea*	*8,920*
2950.000 SITE RESTORATION														
Restore Landscaping	138.00 msf	30.00 /msf	30.00 /msf	4,140	50.00 /msf	6,900	-		20.00 /msf	2,760	-	-	100.00 /msf	13,800
SITE RESTORATION		*/msf*		*4,140*		*6,900*				*2,760*			*/msf*	*13,800*
15230.301 XH Pipe PE														
42" Steel Pipe, 300 psi, Mortar Lined & Coated	5,675.00 lf	24.50 /lf	16.78 /mh	139,037	154.00 /lf	873,950	-		12.00 /lf	68,100	-	-	190.50 /lf	1,081,087
Welding per Joint - 42"	124.00 ea	2,493.00 /ea	2,493.00 /ea	309,132	86.00 /ea	10,664	-		70.00 /ea	8,680	-	-	2,649.00 /ea	328,476
XH Pipe PE		*/lf*		*448,169*		*884,614*				*76,780*			*/lf*	*1,409,563*
15230.314 Pipe Fittings														
42" Pipe Fittings	4.00 ea	750.00 /ea	16.78 /mh	3,000	4,400.00 /ea	17,600	-		155.00 /ea	620	-	-	5,305.00 /ea	21,220
Pipe Fittings		*/ea*		*3,000*		*17,600*				*620*			*/ea*	*21,220*
15230.340 Turn Outs, Drains, Air Re														
Air Release Vault, 2"	3.00 ea	2,937.00 /ea	2,937.00 /ea	8,811	6,298.00 /ea	18,894	-		479.00 /ea	1,437	-	-	9,714.00 /ea	29,142
Air Vacuum/Air Release Vault, 8"	1.00 ea	5,078.00 /ea	5,078.00 /ea	5,078	21,428.00 /ea	21,428	-		757.00 /ea	757	-	-	27,263.00 /ea	27,263
Drain Vault, 4"	2.00 ea	8,997.00 /ea	8,997.00 /ea	17,994	11,041.00 /ea	22,082	-		2,080.00 /ea	4,160	-	-	22,118.00 /ea	44,236
Air Vacuum/Air Release Vault, 6"	1.00 ea	5,078.00 /ea	5,078.00 /ea	5,078	21,428.00 /ea	21,428	-		757.00 /ea	757	-	-	27,263.00 /ea	27,263
48" Turn Out, East Santaquin	1.00 ea	10,100.00 /ea	10,100.00 /ea	10,100	196,600.00 /ea	196,600	23,500		3,680.00 /ea	3,680	-	-	233,880.00 /ea	233,880
Turn Outs, Drains, Air Re		*/ea*		*47,061*		*280,432*	*23,500*			*10,791*			*/ea*	*361,784*
16151.110 Cathodic Protection														
Cathodic Protection, Impressed Current	5,675.00 lf		/mh		/lf		5,675		-	-	-	-	1.00 /lf	5,675
Joint Seal	124.00 ea		/mh		/ea		15,500		-	-	-	-	125.00 /ea	15,500
Joint Bond	124.00 ea		/mh		/ea		7,440		-	-	-	-	60.00 /ea	7,440
Test Station at 1000 LF	6.00 ea		/mh		/ea		2,400		-	-	-	-	400.00 /ea	2,400
Insulating Flange Kits	1.00 ea		/mh		/ea		800		-	-	-	-	800.00 /ea	800
PCR Kits	1.00 ea		/mh		/ea		2,000		-	-	-	-	2,000.00 /ea	2,000
Cathodic Protection		*/lf*					*33,815*						*/lf*	*33,815*

Spreadsheet Level	Takeoff Quantity	Labor Cost/Unit	Labor Price	Labor Amount	Material Price	Material Amount	Sub Amount	Sub Name	Equip Price	Equip Amount	Other Price	Other Amount	Total Cost/Unit	Total Amount
1014 Station 876+00 to 932+75				701,143		1,367,516	66,235			246,644				2,381,537
1015 Station 932+75 to 938+26														
2240.120 Dewatering														
Well point Dewatering	0.50 mo	24,400.00 /mo	18.00 /mh	12,200	10,500.00 /mo	5,250	-		/mo		-	-	34,900.00 /mo	17,450
Dewatering		*/mo*		*12,200*		*5,250*							*/mo*	*17,450*
2316.202 Pipe Excavation														
Excavate Silt-Clay, Loam, Hydraulic Hoe	1,772.00 cy	0.94 /cy	140.08 /cd	1,666	-	-	-		1.60 /cy	2,835	-	-	2.54 /cy	4,501
Backfill and Compact, Machine	1,569.00 cy	1.53 /cy	140.08 /cd	2,401	-	-	-		0.89 /cy	1,396	-	-	2.42 /cy	3,797
Excess Material Offsite	645.00 cy	3.30 /cy	140.08 /cd	2,129	-	-	-		2.93 /cy	1,890	-	-	6.23 /cy	4,018
Pipe Excavation		*/cy*		*6,195*						*6,121*			*/cy*	*12,316*
2370.150 Temp Erosion Control														
Erosion Control Mats-Slopes	1,703.00 sf	0.12 /sf	12.08 /ch	206	2.00 /sf	3,747	-		-	-	-	-	2.32 /sf	3,952
Temp Erosinn Control		*/sf*		*206*		*3,747*							*/sf*	*3,952*
2446.100 Pipe Bore and Jack														
Pipe Boring, 48" Casing, RR Crossing, Station 938+00	100.00 lf	150.00 /lf	150.00 /lf	15,000	120.00 /lf	12,000			100.00 /lf	10,000	-	-	370.00 /lf	37,000
Receiving Pits	1.00 ea	450.00 /ea	450.00 /ea	450	1,530.00 /ea	1,530	-		1,580.00 /ea	1,580	-	-	3,560.00 /ea	3,560
Entry Pit	1.00 ea	3,430.00 /ea	3,430.00 /ea	3,430	13,000.00 /ea	13,000	-		13,450.00 /ea	13,450	-	-	29,880.00 /ea	29,880
Pipe Bore and Jack		*/lf*		*18,880*		*26,530*				*25,030*			*/lf*	*70,440*
2502.014 Pipe Bedding														
Utility Bec Gravel-Crushed	435.00 cy	3.30 /cy	96.64 /cd	1,436	12.00 /cy	5,742	-		11.70 /cy	5,090	-	-	28.20 /cy	12,267
Pipe Bedding		*/cy*		*1,436*		*5,742*				*5,090*			*/cy*	*12,267*
2630.006 Catch Basin 6'														
4" Blow-Off Drainage System, 935+98	1.00 ea		/ch		/ea		***9,600***		/ch		-	-	9,600.00 /ea	9,600
Catch Basin 6'		*/ea*					*9,600*						*/ea*	*9,600*
2950.000 SITE RESTORATION														
Restore Landscaping	18.00 msf	30.00 /msf	30.00 /msf	540	50.00 /msf	900	-		20.00 /msf	360	-	-	100.00 /msf	1,800
SITE RESTORATION		*/msf*		*540*		*900*				*360*			*/msf*	*1,800*
15230.301 XH Pipe PE														
36" Steel Pipe, 300 psi Mortar Lined & Coated	551.00 lf	24.50 /lf	16.78 /mh	13,499	117.00 /lf	64,467	-		12.00 /lf	6,612	-	-	153.50 /lf	84,578
Welding per Joint - 36"	16.00 ea	1,475.00 /ea	1,475.00 /ea	23,600	86.00 /ea	1,376	-		70.00 /ea	1,120	-	-	1,631.00 /ea	26,096
XH Pipe PE		*/lf*		*37,099*		*65,843*				*7,732*			*/lf*	*110,674*
15230.314 Pipe Fittings														
36" Pipe Fittings	2.00 ea	750.00 /ea	16.78 /mh	1,500	4,400.00 /ea	8,800	-		155.00 /ea	310	-	-	5,305.00 /ea	10,610
Pipe Fittings		*/ea*		*1,500*		*8,800*				*310*			*/ea*	*10,610*
15230.340 Turn Outs, Drains, Air Re														
36" Turn Out, West Santacuin	1.00 ea	7,579.00 /ea	7,579.00 /ea	7,579	143,707.00 /ea	143,707	-		2,387.00 /ea	2,387	-	-	153,673.00 /ea	153,673
Drain Vault, 4"	1.00 ea	8,997.00 /ea	8,997.00 /ea	8,997	11,041.00 /ea	11,041	-		2,080.00 /ea	2,080	-	-	22,118.00 /ea	22,118
Air Vacuum/Air Release Vault, 6"	1.00 ea	5,078.00 /ea	5,078.00 /ea	5,078	21,428.00 /ea	21,428	-		757.00 /ea	757	-	-	27,263.00 /ea	27,263

Spreadsheet Level	Takeoff Quantity	Labor Cost/Unit	Labor Price	Labor Amount	Material Price	Material Amount	Sub Amount	Sub Name	Equip Price	Equip Amount	Other Price	Other Amount	Total Cost/Unit	Total Amount
Turn Outs, Drains, Air Re		*/ea*		*21,654*		*176,176*				*5,224*			*/ea*	*203,054*
16151.110 Cathodic Protection														
Cathodic Protection, Impressed Current	551.00 lf		/mh		/lf		551		-	-	-	-	1.00 /lf	551
Joint Seal	16.00 ea		/mh		/ea		2,000		-	-	-	-	125.00 /ea	2,000
Joint Bond	16.00 ea		/mh		/ea		960		-	-	-	-	60.00 /ea	960
Test Station at 1000 LF	1.00 ea		/mh		/ea		400		-	-	-	-	400.00 /ea	400
Cathodic Protection		*/lf*					*3,911*						*/lf*	*3,911*
1015 Station 932+75 to 938+25				99,709		292,988	13,511			49,867				456,075
10000 Spanish Fork				***17,037,312***		***28,425,450***	***5,936,769***			***4,657,480***		***1,297,450***		***57,354,461***
Santaquin Pipeline Alt 2														

Partial Totals

Labor	17,037,312		393,569.661	hrs
Material	28,425,450			
Subcontract	5,936,769			
Equipment	4,657,480		59,380.000	hrs
Other	1,297,450			
	57,354,461	57,354,461		
GC's Labor Burden	986,342		32.000 %	C
Trade Labor Burden	3,907,398		28.000 %	C
Total w/Labor Burden	**4,893,740**	**62,248,201**		
Material Sales Tax	2,131,909		7.500 %	C
Subcontractor Bond	118,735		2.000 %	C
Equipment Fuel & Maintenance	1,117,795		24.000 %	C
Other Mark-up	90,822		7.000 %	C
Total Construction Value	**3,459,261**	**65,707,462**		
Profit	6,420,845		7.430 %	T
Contingency	13,141,492		20.000 %	T
Total Project w/o Ins/Bonds	**19,562,337**	**85,269,799**		
Builder's Risk Insurance	268,759		0.311 %	T
General Liability Insurance	432,089		0.500 %	T
Performance & Payment Bond	447,186			B
Project Total	**1,148,034**	**86,417,833**		
	Partial Total	***86,417,833***		

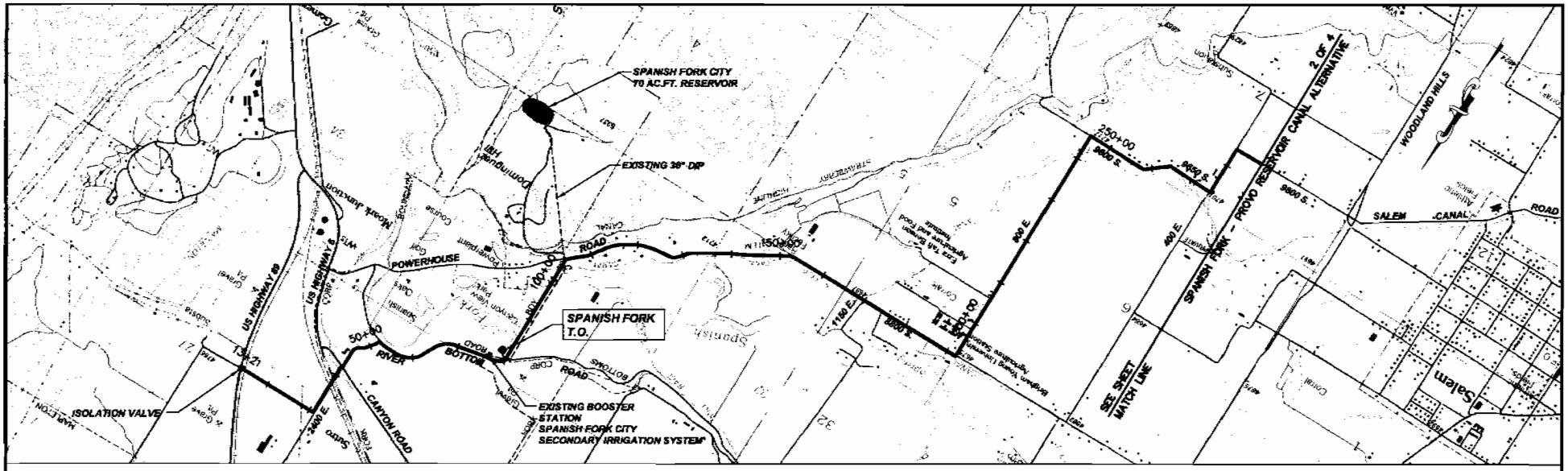

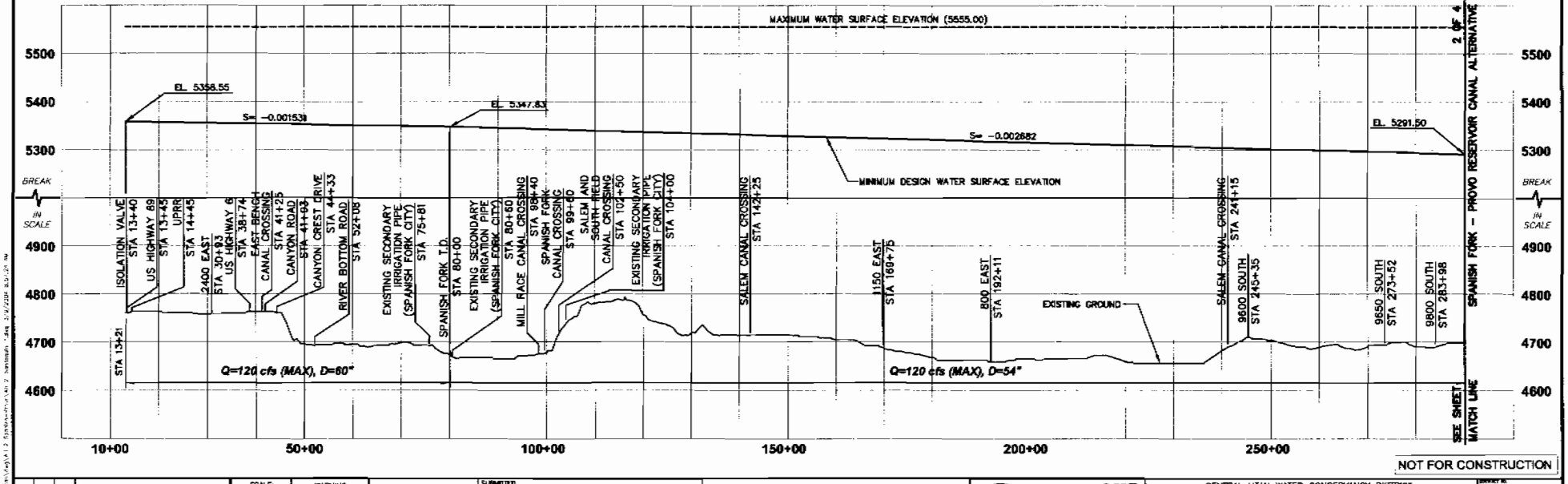

NOT FOR CONSTRUCTION

REV	DATE	BY	DESCRIPTION

SCALE: HORZ: 1" = 1000' VERT. 1" = 100'

WARNING: IF THIS BAR DOES NOT MEASURE 1" THEN DRAWING IS NOT TO SCALE.

DESIGNED
DRAWN
CHECKED

SUBMITTED
(PROJECT MANAGER'S NAME) R. C. E. NO. DATE
(COMPANY OFFICER'S NAME) R. C. E. NO. DATE

MWH
MONTGOMERY WATSON HARZA

CUP

CENTRAL UTAH WATER CONSERVANCY DISTRICT
SPANISH FORK – PROVO RESERVOIR CANAL ALTERNATIVE
SPANISH FORK – SANTAQUIN PIPELINE PLAN AND PROFILE
STA 13+21 TO STA 290+00

DRAWING NO. X
DATE FEBRUARY 2004
PROJECT NO. ALT 2-SANTAQUIN-1
SHEET NO. of 4

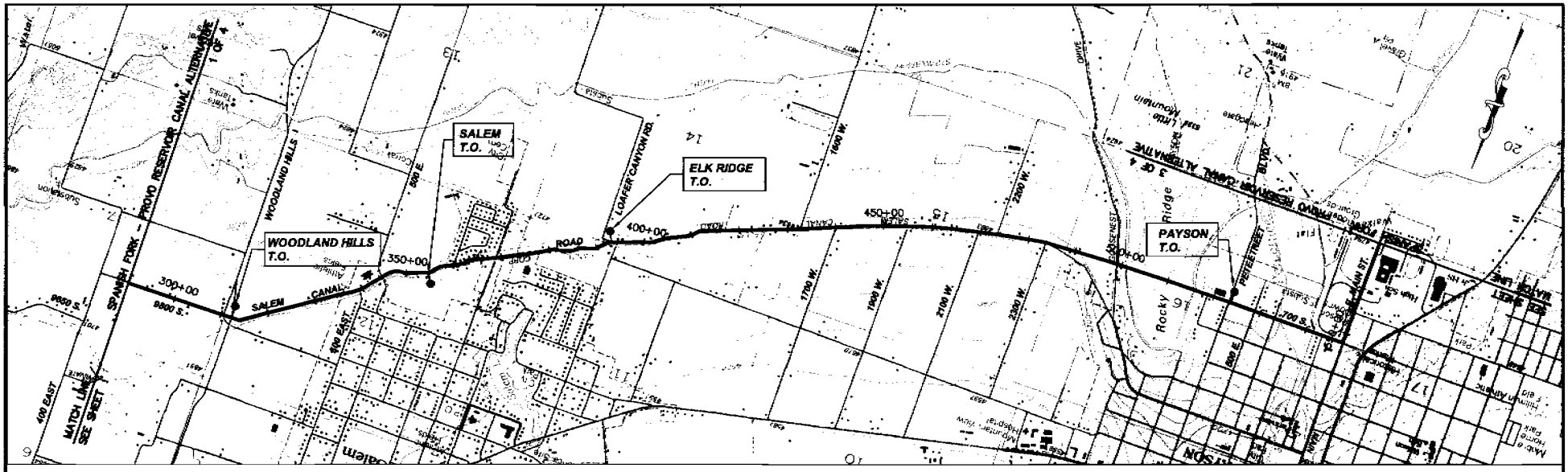

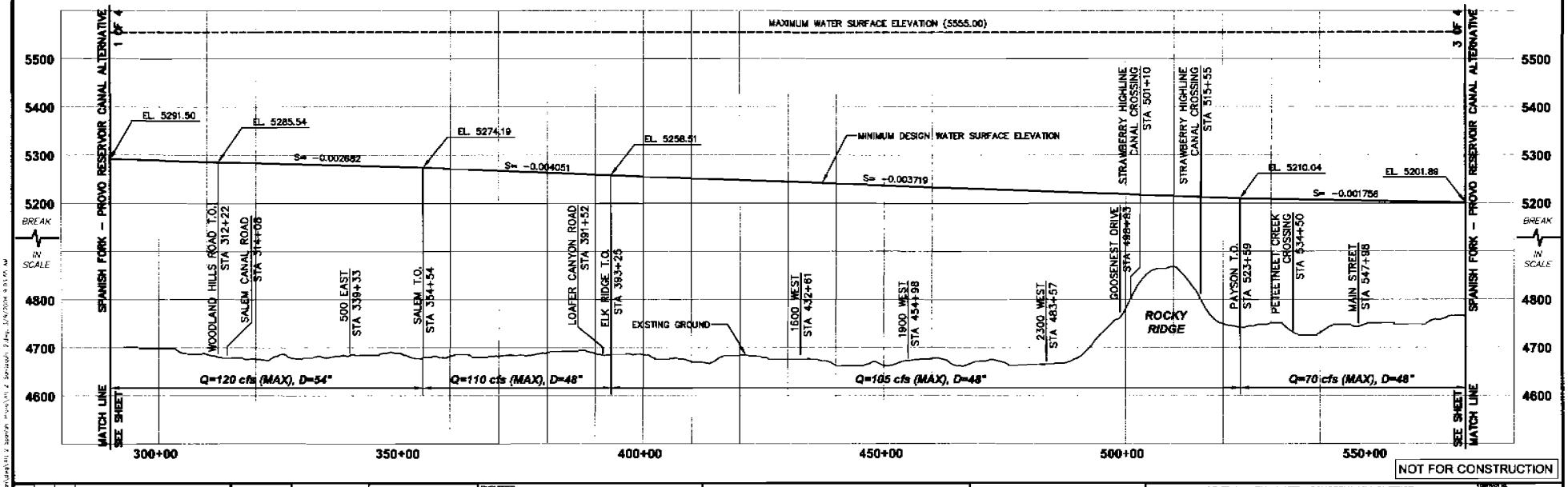

NOT FOR CONSTRUCTION

REV	DATE	BY	DESCRIPTION

SCALE: HORZ: 1" = 1000' VERT: 1" = 100'

WARNING: IF THIS BAR DOES NOT MEASURE 1/2" THEN DRAWING IS NOT TO SCALE.

DESIGNED
DRAWN
CHECKED

SUBMITTED
(PROJECT MANAGER'S NAME) R. C. E. NO. DATE
(COMPANY OFFICER'S NAME) R. C. E. NO. DATE

MWH
MONTGOMERY WATSON HARZA

CUP

CENTRAL UTAH WATER CONSERVANCY DISTRICT
SPANISH FORK – PROVO RESERVOIR CANAL ALTERNATIVE
SPANISH FORK – SANTAQUIN PIPELINE PLAN AND PROFILE
STA 290+00 TO STA 570+00

DRAWING NO. X
DATE FEBRUARY 2004
DRAWING NO. ALT 2-SANTAQUIN-2
SHEET NO. 2 OF 4

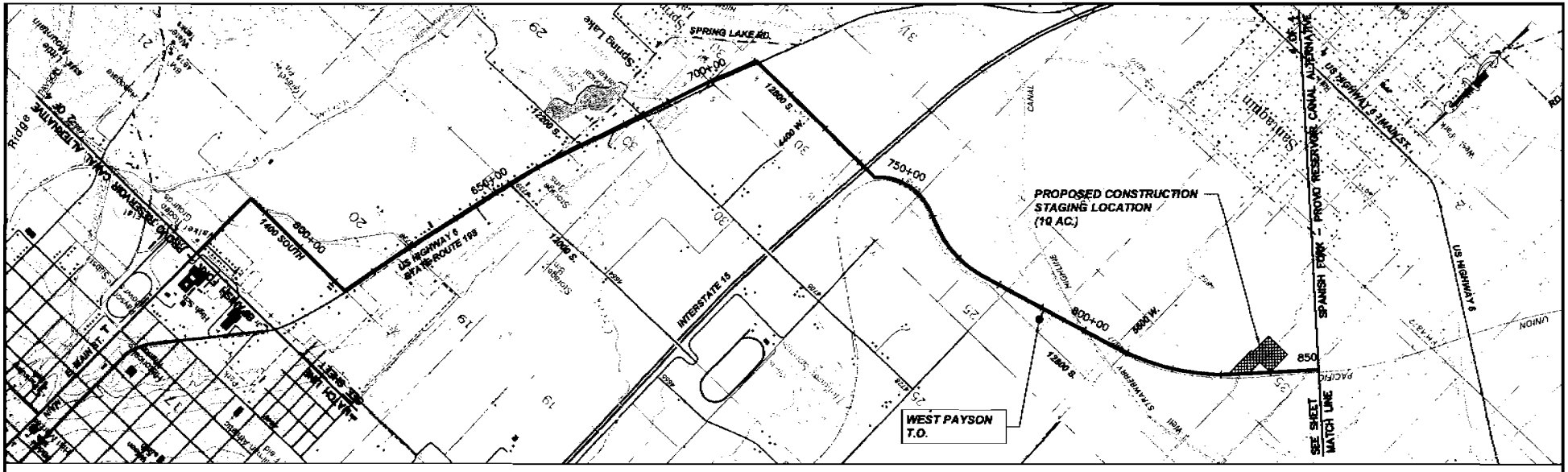

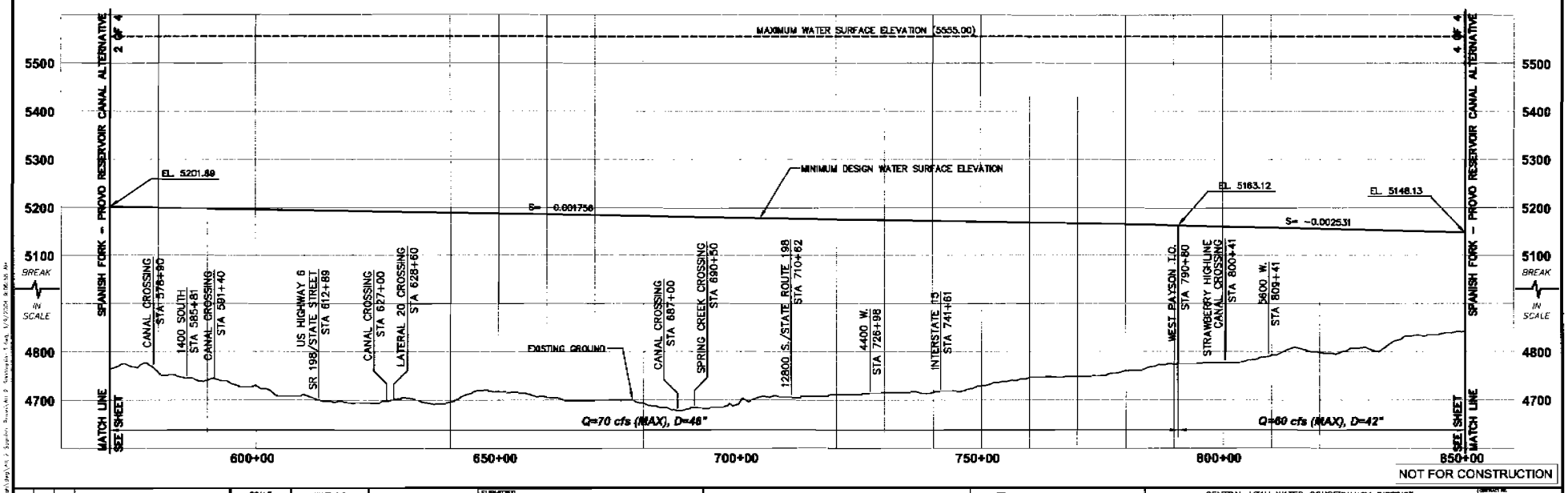

NOT FOR CONSTRUCTION

REV	DATE	BY	DESCRIPTION

SCALE: HORIZ: 1" = 1000' VERT. 1" = 100'

WARNING: IF THIS BAR DOES NOT MEASURE 1" THEN DRAWING IS NOT TO SCALE.

DESIGNED
DRAWN
CHECKED

SUBMITTED
(PROJECT MANAGER'S NAME) R. C. E. NO. DATE
(COMPANY OFFICER'S NAME) R. C. E. NO. DATE

MWH
MONTGOMERY WATSON HARZA

CUP

CENTRAL UTAH WATER CONSERVANCY DISTRICT
SPANISH FORK - PROVO RESERVOIR CANAL ALTERNATIVE
SPANISH FORK - SANTAQUIN PIPELINE PLAN AND PROFILE
STA 570+00 TO STA 850+00

CONTRACT NO. K
DATE FEBRUARY 2004
DRAWING NO. ALT 2-SANTAQUIN-3
SHEET NO. 3 of 4

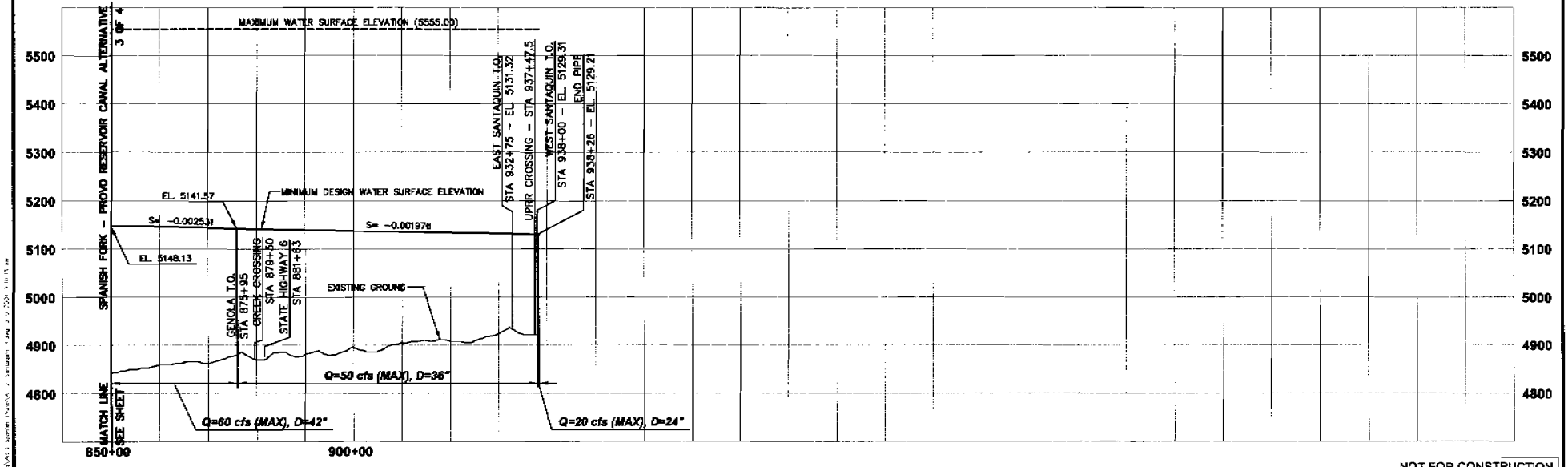

NOT FOR CONSTRUCTION

REV	DATE	BY	DESCRIPTION

SCALE: HORZ: 1" = 1000' VERT. 1" = 100'

WARNING 0 1/2 1 IF THIS BAR DOES NOT MEASURE 1" THEN DRAWING IS NOT TO SCALE.

DESIGNED
DRAWN
CHECKED

SUBMITTED
(PROJECT MANAGER'S NAME) R. C. E. NO. DATE
(COMPANY OFFICER'S NAME) R. C. E. NO. DATE

MWH
MONTGOMERY WATSON HARZA

CENTRAL UTAH WATER CONSERVANCY DISTRICT
SPANISH FORK – PROVO RESERVOIR CANAL ALTERNATIVE
SPANISH FORK – SANTAQUIN PIPELINE PLAN AND PROFILE
STA 850+00 TO STA 938+26

CONTRACT NO. X
DATE FEBRUARY 2004
DRAWING NO. ALT 2-SANTAQUIN-4
SHEET NO. 4 OF 4

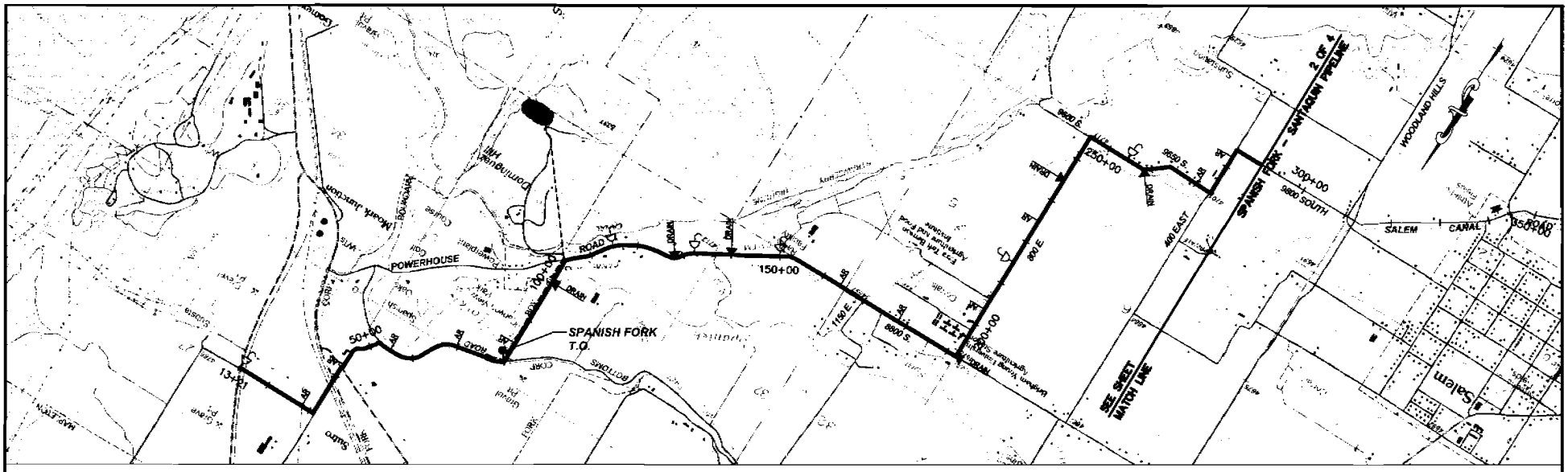

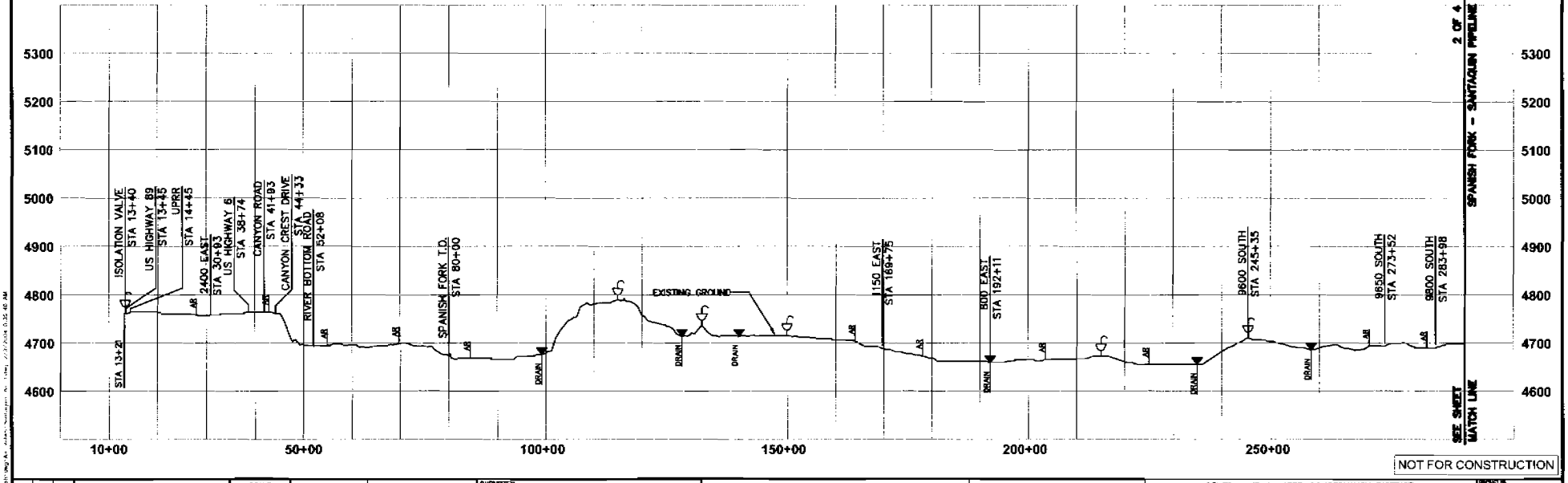

NOT FOR CONSTRUCTION

REV	DATE	BY	DESCRIPTION

SCALE: HORZ: 1" = 1000' VERT. 1" = 100'

WARNING 0 1/2 1 IF THIS BAR DOES NOT MEASURE 1" THEN DRAWING IS NOT TO SCALE

DESIGNED
DRAWN
CHECKED

SUBMITTED
(PROJECT MANAGER'S NAME) R. C. E. NO. DATE
(COMPANY OFFICER'S NAME) R. C. E. NO. DATE

MWH
MONTGOMERY WATSON HARZA

CUP

CENTRAL UTAH WATER CONSERVANCY DISTRICT
AIR RELEASE, VACUUM, and DRAIN VALVES FOR ULS PIPELINES - ALTERNATIVES 1,2,3
SPANISH FORK - SANTAQUIN PIPELINE
STA 13+21 TO STA 290+00

PROJECT NO. K
DATE JANUARY 2004
DRAWING NO. SANTAQUIN-AIR-1
SHEET NO. 1 of 4

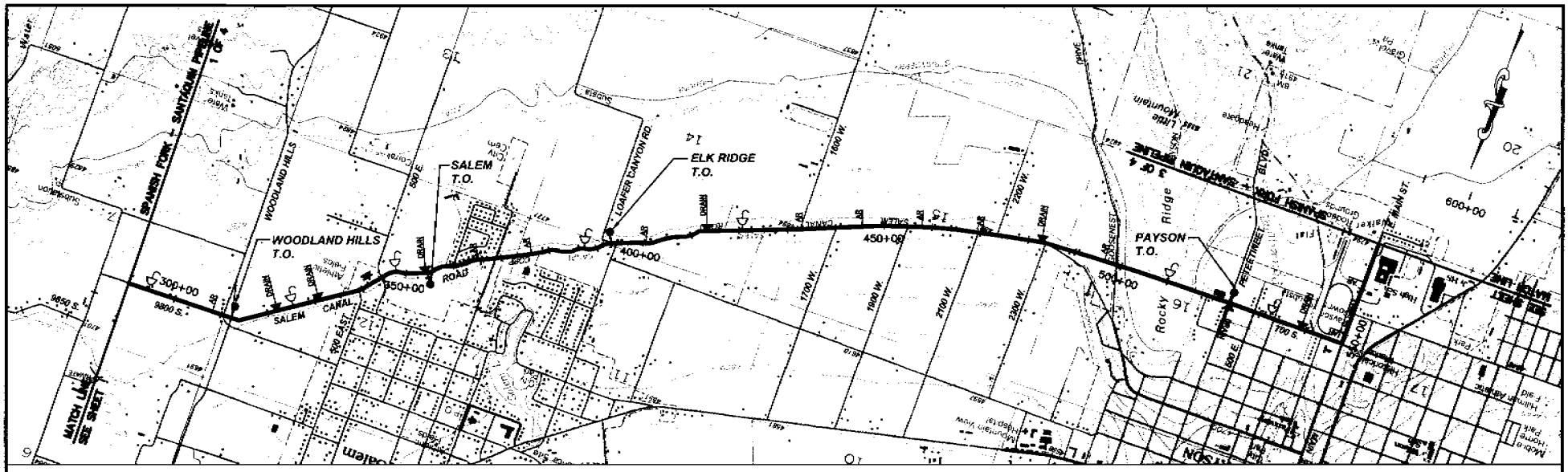

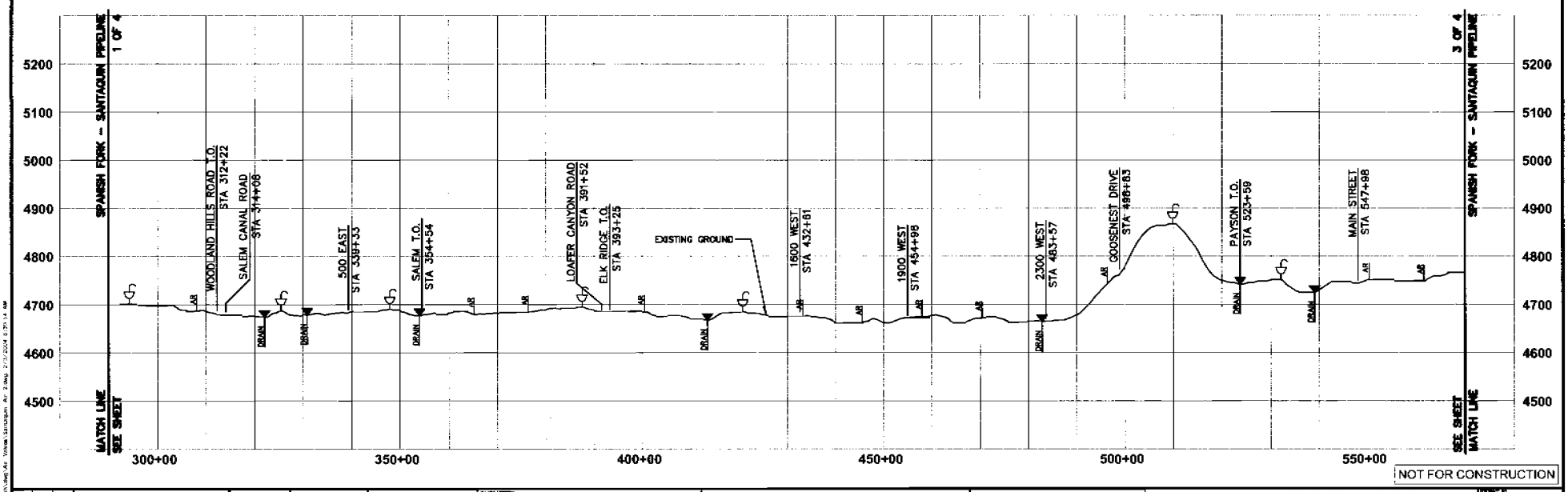

REV	DATE	BY	DESCRIPTION

SCALE: HORZ: 1" = 1000' VERT. 1" = 100'

WARNING 0 1/2 1 IF THIS BAR DOES NOT MEASURE 1" THEN DRAWING IS NOT TO SCALE.

DESIGNED
DRAWN
CHECKED

SUBMITTED
(PROJECT MANAGER'S NAME) R. C. E. NO. DATE
(COMPANY OFFICER'S NAME) R. C. E. NO. DATE

MWH
MONTGOMERY WATSON HARZA

CUP

CENTRAL UTAH WATER CONSERVANCY DISTRICT
AIR RELEASE, VACUUM, and DRAIN VALVES FOR ULS PIPELINES - ALTERNATIVES 1,2,3
SPANISH FORK - SANTAQUIN PIPELINE
STA 290+00 TO STA 570+00

REVISION NO. X
DATE JANUARY 2004
DRAWING NO. SANTAQUIN-AIR-2
SHEET NO. 2 of 4

NOT FOR CONSTRUCTION

REV	DATE	BY	DESCRIPTION

SCALE: HORZ: 1" = 1000' VERT. 1" = 100'

WARNING 0 1/2 1 IF THIS BAR DOES NOT MEASURE 1" THEN DRAWING IS NOT TO SCALE.

DESIGNED
DRAWN
CHECKED

SUBMITTED
(PROJECT MANAGER'S NAME) R. C. E. NO. DATE
(COMPANY OFFICER'S NAME) R. C. E. NO. DATE

MWH MONTGOMERY WATSON HARZA

CUP

CENTRAL UTAH WATER CONSERVANCY DISTRICT
AIR RELEASE, VACUUM, and DRAIN VALVES FOR ULS PIPELINES – ALTERNATIVES 1,2,3
SPANISH FORK – SANTAQUIN PIPELINE
STA 570+00 TO STA 850+00

X
JANUARY 2004
SANTAQUIN-AIR-3
3 of 4

NOT FOR CONSTRUCTION

REV	DATE	BY	DESCRIPTION

SCALE: HORZ: 1" = 1000' VERT. 1" = 100'

WARNING 0 1/2 1 IF THIS BAR DOES NOT MEASURE 1" THEN DRAWING IS NOT TO SCALE.

DESIGNED ____ DRAWN ____ CHECKED ____

SUBMITTED (PROJECT MANAGER'S NAME) R. C. E. NO. DATE (COMPANY OFFICER'S NAME) R. C. E. NO. DATE

MWH MONTGOMERY WATSON HARZA

CENTRAL UTAH WATER CONSERVANCY DISTRICT
AIR RELEASE, VACUUM, and DRAIN VALVES FOR ULS PIPELINES - ALTERNATIVES 1,2,3
SPANISH FORK - SANTAQUIN PIPELINE
STA 850+00 TO STA 938+26

X
JANUARY 2004
SANTAQUIN-AIR-4
4 of 4

TABLE VIII-17

Spanish Fork - Santaquin Pipeline

Station	Air Vacuum Valve		Air Release Valves		Blow-Off Drain Valves	
	Valve Size	Pressure Class	Valve Size	Pressure Class	Valve Size	Pressure Class
13+21	12	350	2	350		
27+00			2	350		
42+00			2	350		
55+00			2	400		
70+00			2	400		
84+00			2	400		
99+00					8*	400
115+00	10	300	2	300		
128+00					4	350
132+00	10	400	2	350		
140+00					4	400
150+00	10	400	2	350		
164+00			2	350		
178+00			2	350		
192+00					6*	400
203+50			2	350		
215+00	10	400	2	350		
224+50			2	350		
235+00					6*	400
245+00	10	400	2	350		
258+00					4	400
270+00			2	350		
282+00			2	350		
294+00	10	400	2	350		
308+00			2	350		
322+00					4	400
325+00	10	400	2	350		
331+00					4	400
347+50	10	400	2	350		
354+00					4	400
365+00			2	350		
376+00			2	350		
387+00	8	400	2	350		
400+50			2	350		
413+50					4	400
421+00	8	400	2	350		

TABLE VIII-17

Spanish Fork - Santaquin Pipeline

Station	Air Vacuum Valve		Air Release Valves		Blow-Off Drain Valves	
	Valve Size	Pressure Class	Valve Size	Pressure Class	Valve Size	Pressure Class
433+00			2	350		
445+50			2	350		
458+00			2	350		
470+50			2	350		
482+50					4	400
496+00			2	350		
510+00	8	350	2	350		
523+50					4*	350
532+00	8	350	2	350		
538+50					4*	350
550+00			2	350		
561+50			2	350		
573+00	8	350	2	300		
576+00					4	350
577+50	8	350	2	350		
589+00			2	400		
601+00			2	400		
613+00			2	400		
625+00					4	400
630+00	8	400	2	400		
638+00					4	400
647+00	8	400	2	400		
660+50			2	400		
674+00			2	400		
687+00					4*	400
701+50			2	400		
715+00			2	400		
729+00			2	400		
743+00			2	400		
757+00			2	400		
771+00			2	350		
785+00			2	350		
799+00	8	350	2	350		
800+00					4	350
815+50			2	350		
831+00			2	350		

TABLE VIII-17

Spanish Fork - Santaquin Pipeline

Station	Air Vacuum Valve		Air Release Valves		Blow-Off Drain Valves	
	Valve Size	Pressure Class	Valve Size	Pressure Class	Valve Size	Pressure Class
846+00			2	300		
861+50			2	300		
877+00	8	300	2	300		
880+50					4	300
893+00			2	300		
906+00			2	300		
919+00			2	300		
932+00	6	300	2	300		
936+00					4	300

* Singer Valve Model 106-AC (anti-cavitation)

(Alternative 2) Crossing Tables for ULS

Table 8 - 5
Highway and Interstate Pipeline Crossings

Feature Name	Approximate Pipeline Station	Highway or Interstate	Crossing Technique
Spanish Fork – Santaquin Pipeline	13+21	US Highway 89	Jack/bore
Spanish Fork – Santaquin Pipeline	38+00	U.S. Highway 6	Jack/bore
Spanish Fork – Santaquin Pipeline	710+00	U.S. Highway 6/State Route 198	Jack/bore
Spanish Fork – Santaquin Pipeline	742+00	Interstate 15	Jack/bore
Spanish Fork – Santaquin Pipeline	882+00	U.S. Highway 6	Jack/bore
Spanish Fork – Provo Reservoir Canal Pipeline	945+00	U.S. Highway 189	Jack/bore
Spanish Fork – Provo Reservoir Canal Pipeline	1014+00	State Route 52	Jack/bore

Table 8-6
Railroad Crossings

Pipeline	Approximate Pipeline Station	Crossing Technique
Spanish Fork – Santaquin Pipeline	14+00	Jack/bore
Spanish Fork – Santaquin Pipeline	38+00	Jack/bore
Spanish Fork – Santaquin Pipeline	938+00	Jack/bore
Spanish Fork Canyon Pipeline	392+00	Jack/bore

Table 8-7
Stream, River and Canal Pipeline Crossings

Pipeline Name	Approximate Pipeline Station	Water Feature	Crossing Technique
Spanish Fork Canyon Pipeline	131+50	Creek	Jack/bore
Spanish Fork Canyon Pipeline	139+10	Creek	Jack/bore
Spanish Fork Canyon Pipeline	164+40	Creek	Jack/bore
Spanish Fork Canyon Pipeline	188+50	Creek	Jack/bore
Spanish Fork Canyon Pipeline	206+00	Creek	Jack/bore
Spanish Fork Canyon Pipeline	223+00	Creek	Jack/bore
Spanish Fork Canyon Pipeline	265+00	Creek	Jack/bore

Table 8-7
Stream, River and Canal Pipeline Crossings

Pipeline Name	Approximate Pipeline Station	Water Feature	Crossing Technique
Spanish Fork Canyon Pipeline	283+75	Creek	Jack/bore
Spanish Fork Canyon Pipeline	306+70	Creek	Jack/bore
Spanish Fork Canyon Pipeline	325+50	Creek	Jack/bore
Spanish Fork Canyon Pipeline	365+50	Creek	Jack/bore
Spanish Fork Canyon Pipeline	383+97	Creek	Jack/bore
Spanish Fork Canyon Pipeline	422+00	Mapleton Lateral Canal	
Spanish Fork – Santaquin Pipeline	98+00	Mill Race Canal	Jack/bore or Micro-tunnel
Spanish Fork – Santaquin Pipeline	100+00	Spanish Fork River	Jack/bore or Micro-tunnel
Spanish Fork – Santaquin Pipeline	103+00	South Field Canal	Jack/bore
Spanish Fork – Santaquin Pipeline	143+00	Salem Canal	Jack/bore
Spanish Fork – Santaquin Pipeline	242+00	Salem Canal	Jack/bore
Spanish Fork – Santaquin Pipeline	501+00	Strawberry Highline Canal	Jack/bore
Spanish Fork – Santaquin Pipeline	516+00	Strawberry Highline Canal	Jack/bore
Spanish Fork – Santaquin Pipeline	578+00	Irrigation Canal	open cut
Spanish Fork – Santaquin Pipeline	592+00	Irrigation Canal	open cut
Spanish Fork – Santaquin Pipeline	627+00	Irrigation Canal	open cut
Spanish Fork – Santaquin Pipeline	630+00	Strawberry Highline Canal	Jack/bore
Spanish Fork – Santaquin Pipeline	686+00	Irrigation Canal	open cut
Spanish Fork – Santaquin Pipeline	691+00	Spring Creek	Jack/bore
Spanish Fork – Santaquin Pipeline	800+00	Strawberry Highline Canal	Jack/bore
Spanish Fork – Santaquin Pipeline	880+00	drainage channel	open cut
Santaquin – Mona Reservoir Pipeline	344+00	Inlet to Mona Reservoir	Jack/bore
Spanish Fork – Provo Reservoir Canal/Pipeline	313+00	Hobble Creek	Jack/bore
Spanish Fork – Provo Reservoir Canal/Pipeline	357+00	Spring Creek	Jack/bore
Spanish Fork – Provo Reservoir Canal/Pipeline	678+00	Upper Union Canal	Open cut
Spanish Fork – Provo Reservoir	768+00	Rock Canyon	Open cut

(Alternative 2) Crossing Tables for ULS

Table 8-7 Stream, River and Canal Pipeline Crossings			
Pipeline Name	**Approximate Pipeline Station**	**Water Feature**	**Crossing Technique**
Canal/Pipeline			
Spanish Fork – Provo Reservoir Canal/Pipeline	941+00	Timpanogos Canal	Jack/bore
Spanish Fork – Provo Reservoir Canal/Pipeline	987+00	Provo River	Micro-tunnel
Spanish Fork – Provo Reservoir Canal/Pipeline	1003+00	Union Canal	Jack/bore
Spanish Fork – Provo Reservoir Canal/Pipeline	1010+00	Bench Canal	Jack/bore
Spanish Fork – Provo Reservoir Canal/Pipeline	1013+00	Provo Reservoir Canal	Jack/bore

TABLE VIII-21
Discharge and Drain Locations for Spanish Fork-Santaquin

Station	Drain Size (inch)	Disturbance area			Length of Road Cut (ft)	Discharge Feature			Discharge (cfs)	Remarks
		Width (ft)	Length (ft)	Area (sf)		Natural Drainage	Storm Drain	Pumped to Surface		
Santaquin										
99+00	8	50	30	1500	NA	x			5.0 to 10.0	Discharge to Spanish Fork River
128+00	4	50	20	1000	24	x			1.5 to 3.0	Discharge to Salem Canal
140+00	4	50	20	1000	24	x			1.5 to 3.0	Discharge to Salem Canal
192+00	6	50	20	1000	28	x			2.0	Discharge South Field Canal
235+00	6	50	20	1000		x			2.0	Discharge to S. C. (600' +/- along pipe)
258+00	4	50	20	1000	30	x			1.0 to 1.5	Discharge to Salem Canal
322+00	4	50	20	1000	50	x			0.5 to 1.0	Discharge to Salem Canal
331+00	4	50	20	1000	50	x			0.5 to 1.0	Discharge to Salem Canal
354+00	4	50	20	1000	50	x			0.5 to 1.0	Disch. to Salem Canal
413+50	4	50	20	1000	50	x			0.5 to 1.5	Discharge to Salem Canal
482+50	4	50	20	1000	30	x			0.5 to 1.5	Discharge to Salem Canal
523+50	4			0	20		x		0.5 to 1.5	
538+50	4			0	20		x		0.5 to 1.5	
576+00	4			0	20			x	0.5 to 1.5	Discharge to curb and gutter
625+00	4	50	50	2500		x			0.5 to 1.5	Discharge near wingwall of 7 x 9 RBC
638+00	4			0	60			x	0.5 to 1.5	no storm drain or curb & gutter
687+00	4	50	50	2500		x			0.5 to 1.5	Spring Creek
800+00	4	50	30	1500					0.5 to 1.5	Highline Canal
880+50	4	50	20	1000		x			0.5 to 1.5	Natural drainage
935+98	4	50	50	2500		x			0.5 to 1.5	Summit Creek Irrigation

P:\MWH\Central Utah\dwg\Tech Memo 3-B\Sheets\Figures\Fig-3-B-4.dwg, 1/21/2004 3:22:36 PM

SCALE: N/A

MWH
MONTGOMERY WATSON HARZA

CUP

CENTRAL UTAH WATER CONSERVANCY DISTRICT

TYPICAL DETAIL

BLOW-OFF DRAIN

FIGURE III-B-4

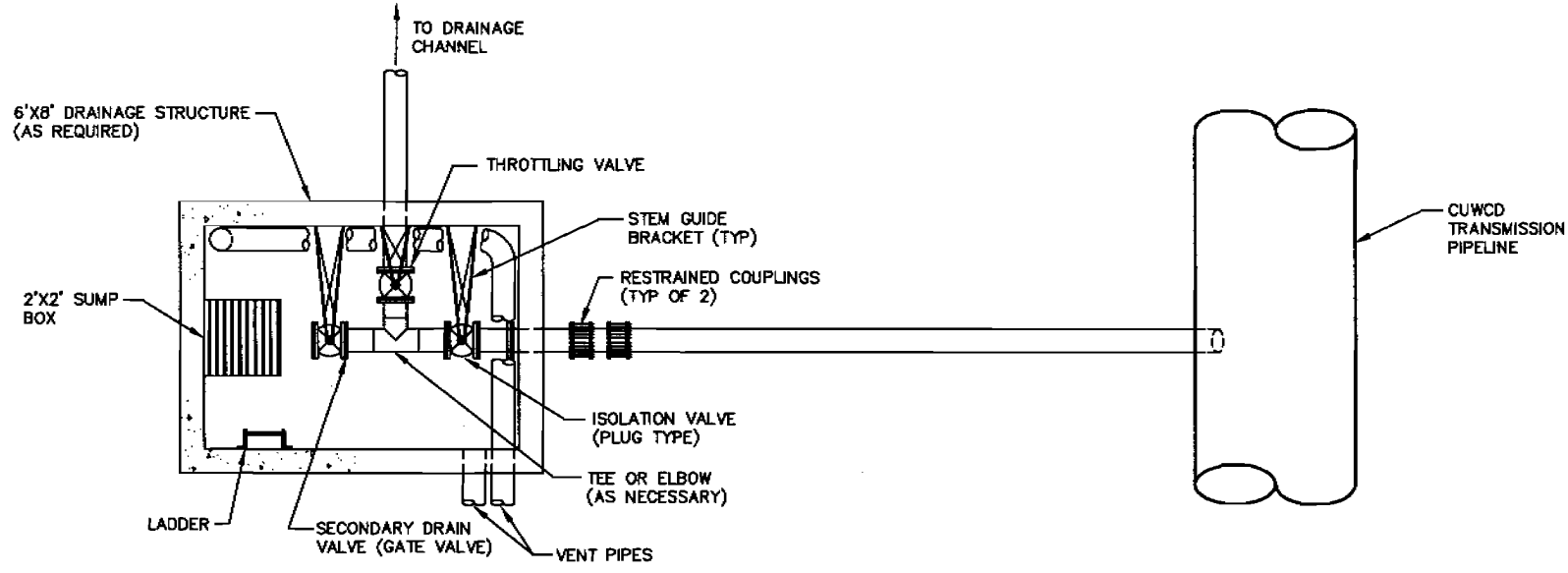

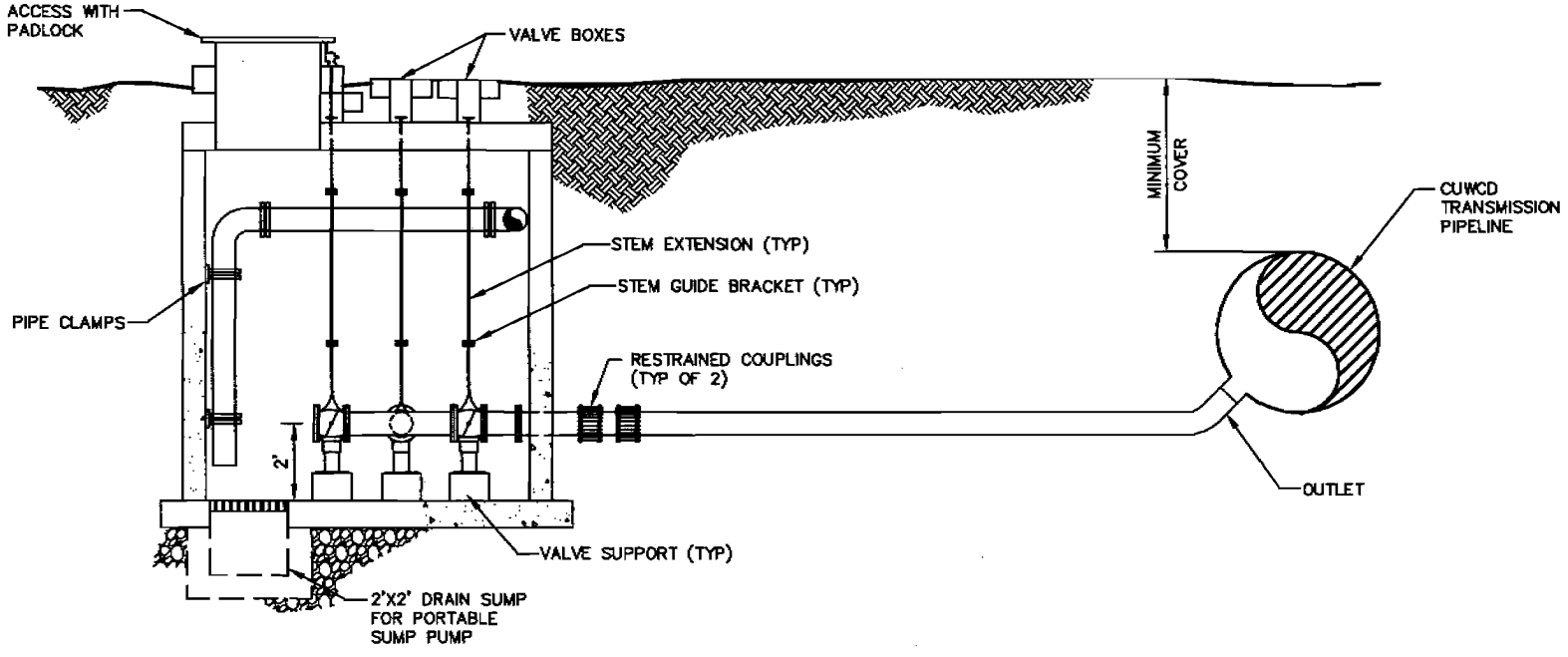

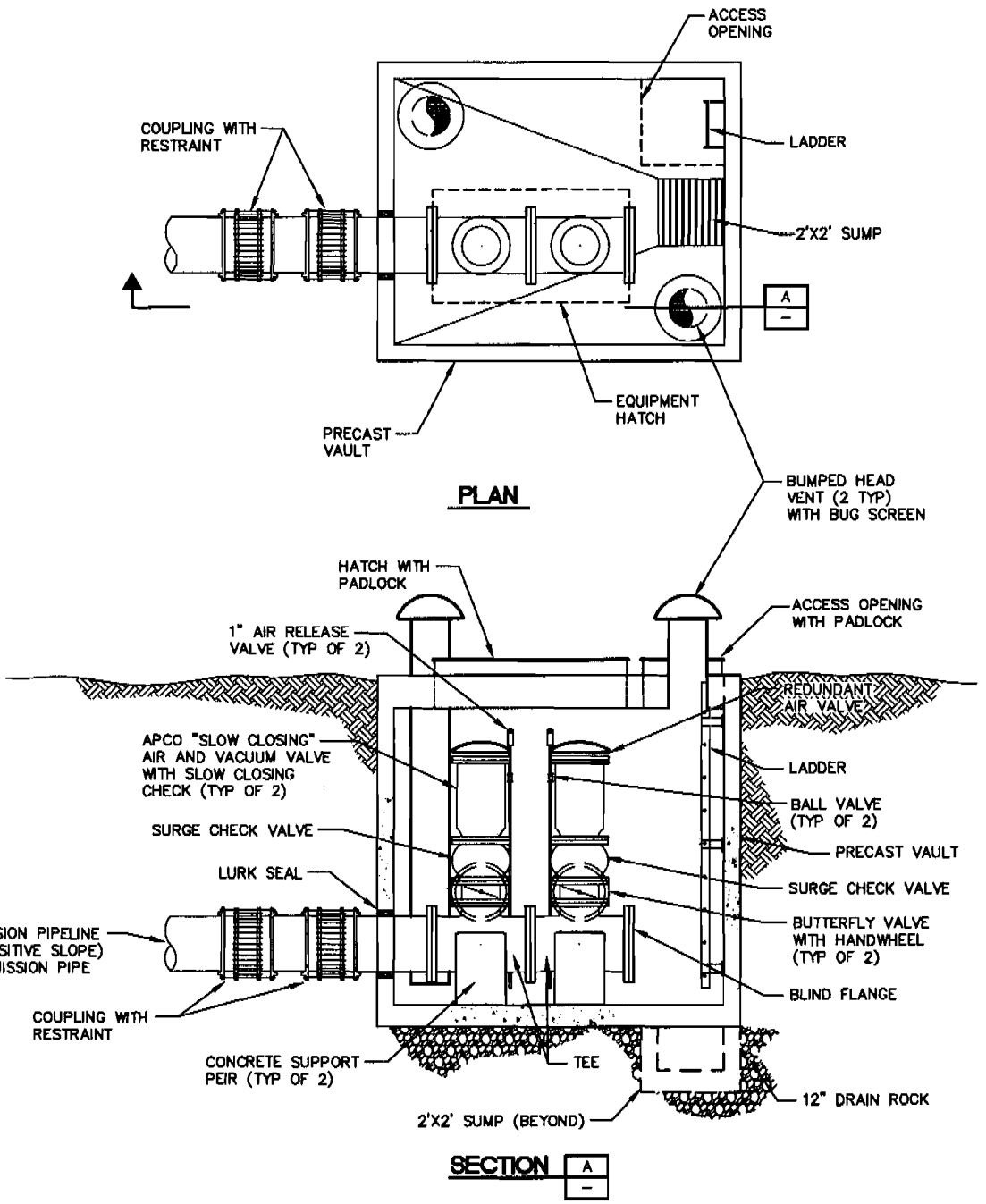

AIR VACUUM/AIR RELEASE VAULT

(6" TO 12" VALVES)

SCALE: N/A	MWH MONTGOMERY WATSON HARZA	CUP	CENTRAL UTAH WATER CONSERVANCY DISTRICT TYPICAL DETAIL AIR VACUUM/AIR RELEASE VAULT FIGURE III-B-5

P:\MWH\Central Utah\Dwg\Tech Memo 3-B\Sheets\Figures\Fig-3-B-5.dwg, 1/27/2004 9:41:15 PM

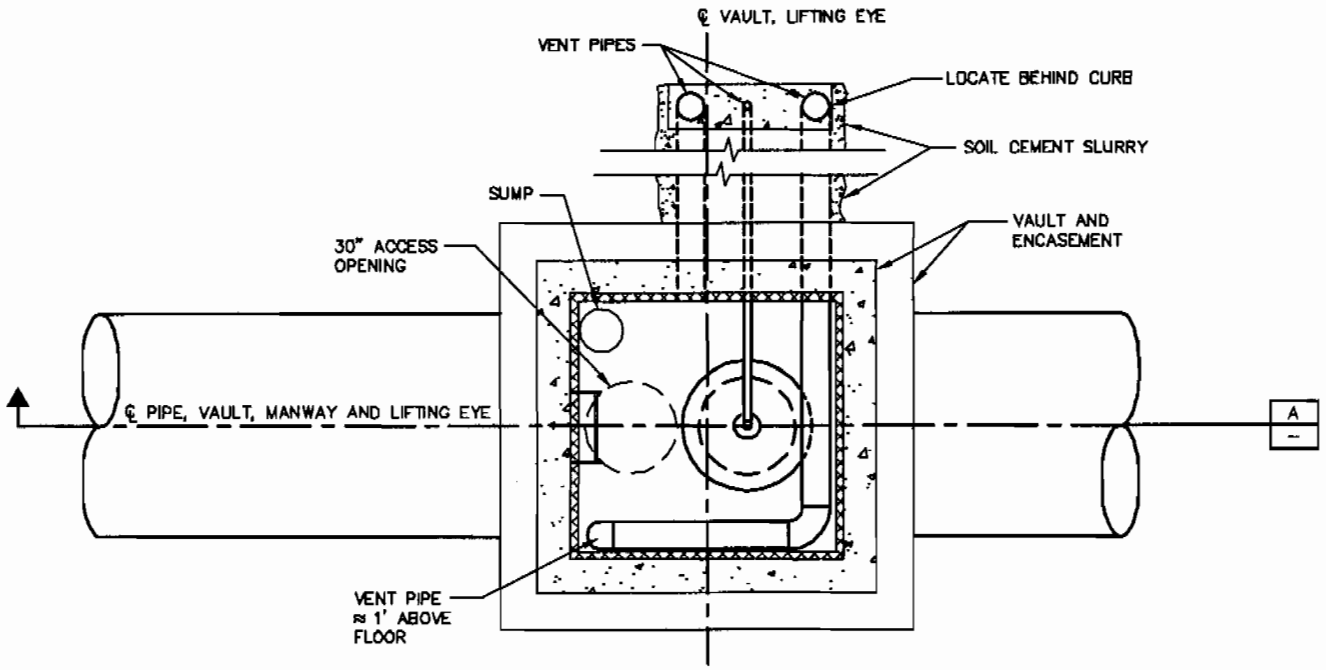

PLAN

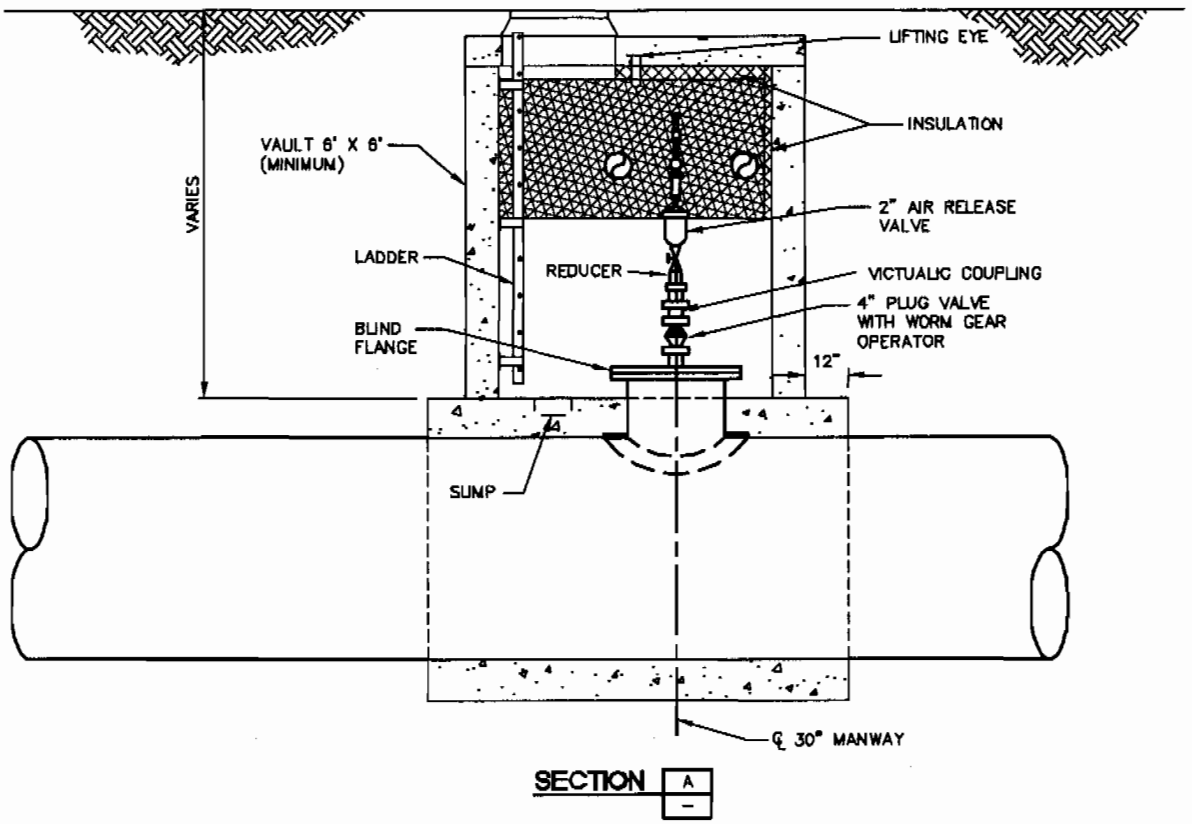

SECTION A

AIR RELEASE VAULT

SCALE:			
N/A	MWH MONTGOMERY WATSON HARZA	CUP	CENTRAL UTAH WATER CONSERVANCY DISTRICT TYPICAL DETAIL AIR RELEASE VAULT **FIGURE III-B-6**

P:\MWH\Central Utah\dwg\Figures\Fig-3-B-6.dwg, 11/20/2003 11:51:38 AM

P:\MWH\Central Utah\dwg\Tech Memo 3-B\Sheets\Figures\Fig-3-B-15.dwg, 1/21/2004 3:03:05 PM

SCALE: N/A

MWH
MONTGOMERY WATSON HARZA

CUP

CENTRAL UTAH WATER CONSERVANCY DISTRICT

STANDARD DETAIL

TYPICAL TURNOUT WITH METER

FIGURE III-B-15

METER SIZE	VAULT SIZE
12"	6' X 8'
18"	6' X 10'
24"	8' X 10'
30"	8' X 12'
36"	10' X 14'

1. ISOLATION VALVE
2. COUPLING
3. STRAINER
4. METER
5. FLANGE COUPLING ADAPTER
6. ISOLATION VALVE WITH HAND WHEEL
7. PIPE SUPPORT
8. VALVE BOX WITH STEM EXTENSION
9. TELEMETER FLOW TRANSMITTER (AS REQUIRED)

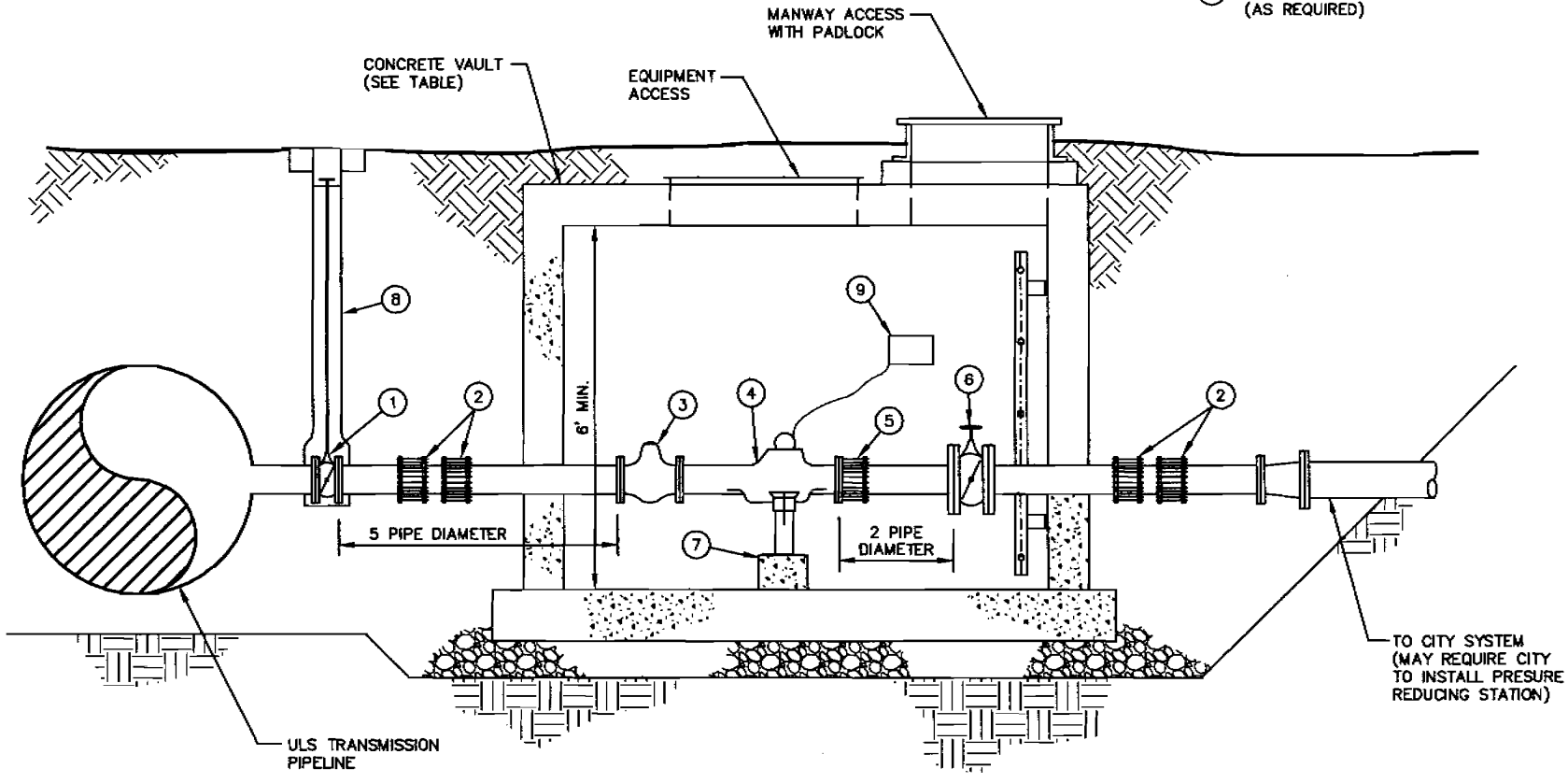

Central Utah Project Completion Program

Santaquin - Mona Reservoir Pipeline

October 2004

UTAH RECLAMATION MITIGATION AND CONSERVATION COMMISSION

TABLE VIII-5
SUMMARY SHEET
FOR
SANTAQUIN-MONA RESERVOIR PIPELINE

	LABOR	MATERIAL	SUB AMOUNT	EQUIPMENT	OTHER	TOTAL	TOTAL w/Markups*
General Conditions	$1,026,900	$143,455	$7,420	$74,650	$85,000	$1,337,425	$2,045,469
Easement Costs	$0	$0	$0	$0	$367,800	$367,800	$562,516
Traffic Control	$0	$0	$0	$0	$0	$0	$0
Pipeline Costs	$1,960,475	$3,000,907	$0	$1,046,709	$0	$6,008,091	$9,188,825
Dewatering	$204,960	$88,200	$0	$0	$0	$293,160	$448,361
Erosion Control	$29,412	$535,652	$0	$0	$0	$565,064	$864,214
Utility work	$23,660	$16,185	$0	$6,355	$0	$46,200	$70,659
Road Restoration	$0	$0	$577,982	$0	$0	$577,982	$883,971
Landscaping	$24,780	$41,300	$0	$16,520	$0	$82,600	$126,329
Misc. Valves	$123,241	$273,189	$68,800	$22,807	$0	$488,037	$746,408
Cathodic Protection	$0	$0	$197,307	$0	$0	$197,307	$301,763
Jack & Bore	$28,680	$44,730	$0	$33,730	$0	$107,140	$163,861
Mona PRV Vault	$15,135	$133,214	$35,000	$40	$0	$183,389	$280,477
Discharge Structure	$11,832	$11,825	$0	$425	$0	$24,082	$36,831
Total	**$3,449,073**	**$4,288,656**	**$886,509**	**$1,201,236**	**$452,800**	**$10,278,275**	**$15,719,680**

* Mark-ups - see Preliminary Design Cost Estimate and Schedule for list of cost markups

Assumptions:

General Assumption - Assumed that excavations through Spanish Fork, Salem, Payson, Santaquin Cities would require pipeline to be installed at depth of 4 to 10 feet of cover.

General Conditions - Includes permits, testing and inspection, QA/QC plans, field office equipment and personnel, and mobilization/demobilization

Easement Costs - Include property acquisition costs, title search, appraisals, etc.

Traffic Control - Includes flaggers, traffic control plan, etc.

peline Costs - Includes excavation, backfill/compaction,60/54/48/42/36-inch pipes, welded joints

work - Includes relocation or temporary service for waterlines, gas lines, telephone. Also includes reconnection of water service, gas service, telephone service lines

les asphalt restoration (6-inch asphalt, 12-inch base course) for State Roads with plant mix seal coats (4-inch asphalt, 12-inch base course) for City Roads.

is Valves - Air Vacuum/Air Release Valve Structures, Air Release Structures, Drain Valves including drain lines to discharge locations.

its - Assumed that only one side of road would require curb & gutter, sidewalk, and driveways would be replaced

Spreadsheet Level	Takeoff Quantity	Labor Cost/Unit	Labor Price	Labor Amount	Material Price	Material Amount	Sub Amount	Sub Name	Equip Price	Equip Amount	Other Price	Other Amount	Total Cost/Unit	Total Amount
11000 Santaquin Mona Reservoir Pipeline Alt 2														
01 General Conditions				1,732,689		206,905	10,294			119,985		650,810		2,720,683
501 Station 12+28 to 53+00				392,404		576,366	35,924			176,179				1,180,874
502 Station 53+00 to 128+00				744,611		1,078,951	112,837			335,796				2,272,196
503 Station 128+00 to 349+10				2,061,435		3,126,898	825,670			1,000,120				7,014,123
504 Station 349+10 to 378+00				322,615		443,683	80,429			127,058				973,785
505 Station 378+00 to 419+10				424,561		543,538	116,145			170,853				1,255,106
506 Mona Reservoir Pressure Reducing Vault				24,931		192,134	48,556			64				265,685
507 Mona Reservoir Discharge Structure				19,490		17,055				683				37,229
11000 Santaquin Mona Reservoir Pipeline Alt 2				*5,722,736*		*6,185,532*	*1,229,854*			*1,930,748*		*650,810*		*15,719,681*

Partial Totals

Labor	5,722,736		129,426.656	hrs
Materia'	6,185,532			
Subcontract	1,229,854			
Equipment	1,930,748		15,701.000	hrs
Other	650,810			
Project Total	15,719,680	15,719,680		
	Partial Total	***15,719,680***		

Spreadsheet Level	Takeoff Quantity	Labor Cost/Unit	Labor Price	Labor Amount	Material Price	Material Amount	Sub Amount	Sub Name	Equip Price	Equip Amount	Other Price	Other Amount	Total Cost/Unit	Total Amount
11000 Santaquin Mona Reservoir Pipeline Alt 2														
01 General Conditions														
0060.000 Land Costs														
Permanent Easement Cost	1.00 ls	-	-	-	-	-	-		-	-	266,100.00 /ls	266,100	266,100.00 /ls	266,100
Temporary Easement Cost	1.00 ls	-	-	-	-	-	-		-	-	39,200.00 /ls	39,200	39,200.00 /ls	39,200
Easements.	25.00 ea	-	-	-	-	-	-		-	-	2,500.00 /ea	62,500	2,500.00 /ea	62,500
Appraisal/Negotiation														
Land Costs		*/ls*										*367,800*	*/ls*	*367,800*
1050.100 Permits														
Construction Permits	1.00 ls	-	-	-	/ls		-		-	-	50,000.00 /ls	50,000	50,000.00 /ls	50,000
Permits		*/ls*										*50,000*	*/ls*	*50,000*
1060.100 Documents														
QA/QC Plan	1.00 ls	11,250.00 /ls	11,250.00 /ls	11,250	2,500.00 /ls	2,500	-		-	-	-	-	13,750.00 /ls	13,750
Documents		*/ls*		*11,250*		*2,500*							*/ls*	*13,750*
1065.100 Start-Up & Commissioning														
Survey & Layouts	1.00 ls	42,000.00 /ls	42,000.00 /ls	42,000	5,000.00 /ls	5,000	-		12,000.00 /ls	12,000	-	-	59,000.00 /ls	59,000
Start-Up & Commissioning		*/ls*		*42,000*		*5,000*				*12,000*			*/ls*	*59,000*
1070.100 Photos														
Project Photos	14.00 mo	450.00 /mo	450.00 /mo	6,300	150.00 /mo	2,100	-		-	-	-	-	600.00 /mo	8,400
Photos		*/mo*		*6,300*		*2,100*							*/mo*	*8,400*
1075.100 Signs														
Project Signs 4x8	1.00 ea	150.00 /ea	150.00 /mn	150	250.00 /ea	250	-		-	-	-	-	400.00 /ea	400
Signs		*/ea*		*150*		*250*							*/ea*	*400*
1100.100 Project Management														
Construction Manager	18.00 wk	2,400.00 /wk	2,400.00 /wk	43,200	-	-	-		100.00 /wk	1,800	-	-	2,500.00 /wk	45,000
Project Engineer	60.00 wk	1,500.00 /wk	1,500.00 /wk	90,000	-	-	-		100.00 /wk	6,000	-	-	1,600.00 /wk	96,000
Purchasing Agent	7.00 wk	2,100.00 /wk	2,100.00 /wk	14,700	-	-	-		75.00 /wk	525	-	-	2,175.00 /wk	15,225
Senior Estimator	7.00 wk	1,500.00 /wk	1,500.00 /wk	10,500	-	-	-		75.00 /wk	525	-	-	1,575.00 /wk	11,025
Geotechnical Engineer	60.00 wk	1,600.00 /wk	1,600.00 /wk	96,000	-	-	-		75.00 /wk	4,500	-	-	1,675.00 /wk	100,500
Scheduling Engineer	60.00 wk	1,600.00 /wk	1,600.00 /wk	96,000	-	-	-		75.00 /wk	4,500	-	-	1,675.00 /wk	100,500
Project Management		*/wk*		*350,400*						*17,850*			*/wk*	*368,250*
1102.100 Site Supervision														
General Superintendent	60.00 wk	2,100.00 /wk	2,100.00 /wk	126,000	-	-	-		/wk		-	-	2,100.00 /wk	126,000
Civil Superintendent	60.00 wk	2,100.00 /wk	2,100.00 /wk	126,000	-	-	-		/wk		-	-	2,100.00 /wk	126,000
Assistant Superintendent	60.00 wk	1,500.00 /wk	1,500.00 /wk	90,000	-	-	-		/wk		-	-	1,500.00 /wk	90,000
Site Supervision		*/wk*		*342,000*									*/wk*	*342,000*
1106.100 Clerical Staff														
Project Secretary	60.00 wk	1,400.00 /wk	1,400.00 /wk	84,000	-	-	-		-	-	-	-	1,400.00 /wk	84,000
Time Keeper	60.00 wk	480.00 /wk	480.00 /wk	28,800	-	-	-		-	-	-	-	480.00 /wk	28,800
Clerical Staff		*/wk*		*112,800*									*/wk*	*112,800*
1110.100 Travel														
Weekly Auto Allowance	169.00 wk	-	-	-	75.00 /wk	12,675	-		-	-	-	-	75.00 /wk	12,675
Travel		*/wk*				*12,675*							*/wk*	*12,675*
1200.100 Security														
Watchman	60.00 wk	1,200.00 /wk	1,200.00 /wk	72,000	-	-	2,100		-	-	-	-	1,235.00 /wk	74,100
Conc Jersey Barriers	250.00 lf	-	-	-	8.00 /lf	2,000	-		-	-	-	-	8.00 /lf	2,000

Spreadsheet Level	Takeoff Quantity	Labor Cost/Unit	Labor Price	Labor Amount	Material Price	Material Amount	Sub Amount	Sub Name	Equip Price	Equip Amount	Other Price	Other Amount	Total Cost/Unit	Total Amount
Security		/ls		*72,000*		*2,000*	*2,100*						/ls	*76,100*
1250.100 Offices														
Office Trailer	14.00 mo	-	-	-	-	-	-		1,150.00 /mo	16,100	-	-	1,150.00 /mo	16,100
Offices		/ls								*16,100*			/ls	*16,100*
1255.100 Supplies & Equip														
Copy Machine	14.00 mo	-	-	-	550.00 /mo	7,700	-		-	-	-	-	550.00 /mo	7,700
Personal Computer	42.00 mo	-	-	-	200.00 /mo	8,400	-		-	-	-	-	200.00 /mo	8,400
Software Licenses	42.00 mo	-	-	-	75.00 /mo	3,150	-		-	-	-	-	75.00 /mo	3,150
Desks & Chairs	42.00 mo	-	-	-	5.00 /mo	210	-		-	-	-	-	5.00 /mo	210
File Cabinets	14.00 mo	-	-	-	5.00 /mo	70	-		-	-	-	-	5.00 /mo	70
Postage & Courier Services	14.00 mo	-	-	-	200.00 /mo	2,800	-		-	-	-	-	200.00 /mo	2,800
Fax Machine & Line	14.00 mo	-	-	-	150.00 /mo	2,100	-		-	-	-	-	150.00 /mo	2,100
Office Supplies & Equipment	14.00 mo	-	-	-	150.00 /mo	2,100	-		-	-	-	-	150.00 /mo	2,100
Supplies & Equip		/ls				*26,530*							/ls	*26,530*
1260.100 Utilities														
Electric Power	14.00 mo	-	-	-	700.00 /mo	9,800	-		-	-	-	-	700.00 /mo	9,800
Telephone Charges	14.00 mo	-	-	-	750.00 /mo	10,500	-		-	-	-	-	750.00 /mo	10,500
Temporary Toilets	14.00 mo	-	-	-	150.00 /mo	2,100	-		-	-	-	-	150.00 /mo	2,100
Utilities		/ls				*22,400*							/ls	*22,400*
1270.100 OSHA & Safety														
Safety Officer	60.00 wk	1,500.00 /wk	20.00 /mh	90,000	-	-	-		-	-	-	-	1,500.00 /wk	90,000
First Aid	1.00 ls		/ls		60,000.00 /ls	60,000	-		/ls		-	-	60,000.00 /ls	60,000
OSHA & Safety		/ls		*90,000*		*60,000*							/ls	*150,000*
1300.100 Allowances														
Office Furniture - Allowance	1.00 ls		/ls		10,000.00 /ls	10,000			-	-	-	-	10,000.00 /ls	10,000
Allowances		/ls				*10,000*							/ls	*10,000*
1450.100 Testing														
Misc Test & Inspection	14.00 mo	-	-	-	-	-			-	-	2,500.00 /mo	35,000	2,500.00 /mo	35,000
Testing		/ls										*35,000*	/ls	*35,000*
1630.100 Mobilization / Demobiliza														
Mobilization / Demobilization	28.00 ea		/ea		-	-	*5,320*		/ea		-	-	190.00 /ea	5,320
Mobilization / Demobiliza		/ls					*5,320*						/ls	*5,320*
2502.012 Trench Shoring														
Trench Box, 16' Deep, 2 each	28.00 mo	-	-	-	-	-	-		1,025.00 /mo	28,700	-	-	1,025.00 /mo	28,700
Trench Shoring		/mo								*28,700*			/mo	*28,700*
01 General Conditions				**1,026,900**		**143,455**	**7,420**			**74,650**		**452,800**		**1,705,225**
501 Station 12+28 to 53+00														
2240.120 Dewatering														
Wellpoint Dewatering	0.90 mo	24,400.00 /mo	18.00 /mh	21,960	10,500.00 /mo	9,450	-		/mo		-	-	34,900.00 /mo	31,410
Dewatering		/mo		*21,960*		*9,450*							/mo	*31,410*
2316.202 Pipe Excavation														
Excavate Silt-Clay, Loam, Hydraulic Hoe	10,595.00 cy	0.94 /cy	140.08 /cd	9,959	-	-	-		1.60 /cy	16,952	-	-	2.54 /cy	26,911
Backfill and Compact, Machine	9,855.00 cy	1.53 /cy	140.08 /cd	15,078	-	-	-		0.89 /cy	8,771	-	-	2.42 /cy	23,849

Spreadsheet Level	Takeoff Quantity	Labor Cost/Unit	Labor Price	Labor Amount	Material Price	Material Amount	Sub Amount	Sub Name	Equip Price	Equip Amount	Other Price	Other Amount	Total Cost/Unit	Total Amount
2316.202 Pipe Excavation														
Excess Material, 5 Mile Haul, Offsite	3,055.00 cy	2.86 /cy	140.08 /cd	8,737	-	-	-		7.01 /cy	21,416	-	-	9.87 /cy	30,153
Pipe Excavation		*/cy*		*33,775*						*47,139*			*/cy*	*80,913*
2370.150 Temp Erosion Control														
Erosion Control Mats-Slopes	24,433.00 sf	0.12 /sf	12.98 /ch	2,952	2.00 /sf	53,753	-		-	-	-	-	2.32 /sf	56,704
Temp Erosion Control		*/sf*		*2,952*		*53,753*							*/sf*	*56,704*
2502.014 Pipe Bedding														
Utility Bed Gravel-Crushed	2,314.00 cy	2.86 /cy	96.64 /cd	6,618	10.00 /cy	25,454	-		1.74 /cy	4,026	-	-	15.60 /cy	36,098
Pipe Bedding		*/cy*		*6,618*		*25,454*				*4,026*			*/cy*	*36,098*
2740.120 Asphalt Paving - SY														
Compacted Base 12"	100.00 sy	-	-	-	-	-	2,093		-	-	-	-	20.93 /sy	2,093
Asphalt Paving - SY		*/sy*					*2,093*						*/sy*	*2,093*
2950.000 SITE RESTORATION														
Restore Landscaping	90.00 msf	30.00 /msf	30.00 /msf	2,700	50.00 /msf	4,500	-		20.00 /msf	1,800	-	-	100.00 /msf	9,000
SITE RESTORATION		*/msf*		*2,700*		*4,500*				*1,800*			*/msf*	*9,000*
15230.301 XH Pipe PE														
24" Steel Pipe, 300 psi, Mortar Lined & Coated	4,072.00 lf	24.50 /lf	16.78 /mh	99,764	65.95 /lf	268,548	-		12.00 /lf	48,864	-	-	102.45 /lf	417,176
Welding per Joint - 24"	98.00 ea	541.00 /ea	541.00 /ea	53,018	62.50 /ea	6,125	-		50.00 /ea	4,900	-	-	653.50 /ea	64,043
XH Pipe PE		*/lf*		*152,782*		*274,673*				*53,764*			*/lf*	*481,219*
15230.314 Pipe Fittings														
24" Pipe Fittings	11.00 ea	1,050.00 /ea	16.78 /mh	11,550	1,770.00 /ea	19,470	-		175.00 /ea	1,925	-	-	2,995.00 /ea	32,945
Pipe Fittings		*/ea*		*11,550*		*19,470*				*1,925*			*/ea*	*32,945*
15230.340 Turn Outs, Drains, Air Re														
Air Release Vault, 1"	2.00 ea	2,937.00 /ea	2,937.00 /ea	5,874	6,158.00 /ea	12,316	-		479.00 /ea	958	-	-	9,574.00 /ea	19,148
Turn Outs, Drains, Air Re		*/ea*		*5,874*		*12,316*				*958*			*/ea*	*19,148*
16151.110 Cathodic Protection														
Cathodic Protection, Impressed Current	4,072.00 lf		/mh		/lf		4,072		-	-	-	-	1.00 /lf	4,072
Joint Seal	98.00 ea		/mh		/ea		12,250		-	-	-	-	125.00 /ea	12,250
Joint Bond	98.00 ea		/mh		/ea		5,880		-	-	-	-	60.00 /ea	5,880
Test Station at 1000 LF	4.00 ea		/mh		/ea		1,600		-	-	-	-	400.00 /ea	1,600
Cathodic Protection		*/lf*					*23,802*						*/lf*	*23,802*
501 Station 12+26 to 53+00				**238,210**		**399,516**	**25,895**			**109,612**				**773,333**
502 Station 53+00 to 128+00														
2240.120 Dewatering														
Wellpoint Dewatering	1.50 mo	24,400.00 /mo	18.00 /mh	36,600	10,500.00 /mo	15,750	-		/mo		-	-	34,900.00 /mo	52,350
Dewatering		*/mo*		*36,600*		*15,750*							*/mo*	*52,350*
2316.202 Pipe Excavation														
Excavate Silt-Clay, Loam, Hydraulic Hoe	19,520.00 cy	0.94 /cy	140.08 /cd	18,349	-	-	-		1.60 /cy	31,232	-	-	2.54 /cy	49,581
Backfill and Compact, Machine	18,150.00 cy	1.53 /cy	140.08 /cd	27,769	-	-	-		0.89 /cy	16,154	-	-	2.42 /cy	43,923

Spreadsheet Level	Takeoff Quantity	Labor Cost/Unit	Labor Price	Labor Amount	Material Price	Material Amount	Sub Amount	Sub Name	Equip Price	Equip Amount	Other Price	Other Amount	Total Cost/Unit	Total Amount
2316.202 Pipe Excavation														
Excess Material, 5 Mile Haul, Offsite	5,625.00 cy	2.86 /cy	140.08 /cd	16,087	-	-	-		7.01 /cy	39,431	-	-	9.87 /cy	55,519
Pipe Excavation		*/cy*		*62,206*						*86,817*			*/cy*	*149,623*
2370.150 Temp Erosion Control														
Eros on Control Mats-Slopes	45,000.00 sf	0.12 /sf	12.08 /ch	5,436	2.00 /sf	99,000	-		-	-	-	-	2.32 /sf	104,436
Temp Erosion Control		*/sf*		*5,436*		*99,000*							*/sf*	*104,436*
2502.014 Pipe Bedding														
Utility Bed Gravel-Crushed	4,260.00 cy	2.86 /cy	96.64 /cd	12,184	10.00 /cy	46,860	-		1.74 /cy	7,412	-	-	15.63 /cy	66,456
Pipe Bedding		*/cy*		*12,184*		*46,860*				*7,412*			*/cy*	*66,456*
2580.500 Utility Conflicts														
Utility Conflicts	1.00 ea	21,125.00 /ea	25.00 /mh	21,125	13,685.00 /ea	13,685	-		5,680.00 /ea	5,680	-	-	40,490.00 /ea	40,490
Replace Utility Connection, Water, Sewer, Telephone, Gas, Electric	5.00 ea	507.00 /ea	507.00 /ea	2,535	500.00 /ea	2,500	-		135.00 /ea	675	-	-	1,142.00 /ea	5,710
Utility Conflicts		*/ea*		*23,660*		*16,185*				*6,355*			*/ea*	*46,200*
2630.006 Catch Basin 6'														
4" Blow-Off Drainage System, 63+00	1.00 ea		/ch		/ea		17,200		/ch		-	-	17,200.00 /ea	17,200
4" Blow-Off Drainage System, 86+50	1.00 ea		/ch		/ea		17,200		/ch		-	-	17,200.00 /ea	17,200
Catch Basin 6'		*/ea*					*34,400*						*/ea*	*34,400*
2740.120 Asphalt Paving - SY														
Compacted Base 12"	345.00 sy	-	-	-	-	-	7,221		-	-	-	-	20.93 /sy	7,221
Asphalt Paving - SY		*/sy*					*7,221*						*/sy*	*7,221*
2950.000 SITE RESTORATION														
Restore Landscaping	165.00 msf	30.00 /msf	30.00 /msf	4,950	50.00 /msf	8,250	-		20.00 /msf	3,300	-	-	100.00 /msf	16,500
SITE RESTORATION		*/msf*		*4,950*		*8,250*				*3,300*			*/msf*	*16,500*
15230.301 XH Pipe PE														
24" Steel Pipe, 250 psi, Mortar Lined & Coated	7,500.00 lf	24.50 /lf	16.78 /mh	183,750	61.04 /lf	457,800	-		12.00 /lf	90,000	-	-	97.54 /lf	731,550
Welding per Joint - 24"	159.00 ea	541.00 /ea	541.00 /ea	86,019	62.50 /ea	9,938	-		50.00 /ea	7,950	-	-	653.50 /ea	103,907
XH Pipe PE		*/lf*		*269,769*		*467,738*				*97,950*			*/lf*	*835,456*
15230.314 Pipe Fittings														
24" Pipe Fittings	1.00 ea	1,050.00 /ea	16.78 /mh	1,050	1,770.00 /ea	1,770	-		175.00 /ea	175	-	-	2,995.00 /ea	2,995
Pipe Fittings		*/ea*		*1,050*		*1,770*				*175*			*/ea*	*2,995*
15230.340 Turn Outs, Drains, Air Re														
Air Vacuum/Air Release Vault, 6"	3.00 ea	5,078.00 /ea	5,078.00 /ea	15,234	21,428.00 /ea	64,284	-		757.00 /ea	2,271	-	-	27,263.00 /ea	81,789
Drain Vault, 4"	2.00 ea	8,997.00 /ea	8,997.00 /ea	17,994	11,041.00 /ea	22,082	-		2,080.00 /ea	4,160	-	-	22,118.00 /ea	44,236
Air Release Vault, 1"	1.00 ea	2,937.00 /ea	2,937.00 /ea	2,937	6,158.00 /ea	6,158	-		479.00 /ea	479	-	-	9,574.00 /ea	9,574
Turn Outs, Drains, Air Re		*/ea*		*36,165*		*92,524*				*6,910*			*/ea*	*135,599*
16151.110 Cathodic Protection														
Cathodic Protection, Impressed Current	7,500.00 lf		/mh		/lf		7,500		-	-	-	-	1.00 /lf	7,500

Spreadsheet Level	Takeoff Quantity	Labor Cost/Unit	Labor Price	Labor Amount	Material Price	Material Amount	Sub Amount	Sub Name	Equip Price	Equip Amount	Other Price	Other Amount	Total Cost/Unit	Total Amount
16151.110 Cathodic Protection														
Joint Seal	159.00 ea		/mh		/ea		19,875		-	-	-	-	125.00 /ea	19,875
Joint Bond	159.00 ea		/mh		/ea		9,540		-	-	-	-	60.00 /ea	9,540
Test Station at 1000 LF	7.00 ea		/mh		/ea		2,800		-	-	-	-	400.00 /ea	2,800
Cathodic Protection		*/lf*					*39,715*						*/lf*	*39,715*
502 Station 53+00 to 128+00				**452,019**		**748,077**	**81,336**			**208,919**				**1,490,351**
503 Station 128+00 to 349+10														
2240.120 Dewatering														
Well point Dewatering	4.50 mo	24,400.00 /mo	18.00 /mh	109,800	10,500.00 /mo	47,250	-		/mo		-	-	34,900.00 /mo	157,050
Dewatering		*/mo*		*109,800*		*47,250*							*/mo*	*157,050*
2316.202 Pipe Excavation														
Excavate Silt-Clay, Loam, Hydraulic Hoe	57,550.00 cy	0.94 /cy	140.08 /cd	54,097	-	-	-		1.60 /cy	92,080	-	-	2.54 /cy	146,177
Backfill and Compact, Machine	53,506.00 cy	1.53 /cy	140.08 /cd	81,864	-	-	-		0.89 /cy	47,620	-	-	2.42 /cy	129,484
Excess Material, 5 Mile Haul, Offsite	16,583.00 cy	2.86 /cy	140.08 /cd	47,427	-	-	-		7.01 /cy	116,247	-	-	9.87 /cy	163,674
Pipe Excavation		*/cy*		*183,388*						*255,947*			*/cy*	*439,336*
2370.150 Temp Erosion Control														
Erosion Control Mats-Slopes	132,660.00 sf	0.12 /sf	12.08 /ch	16,025	2.00 /sf	291,852	-		-	-	-	-	2.32 /sf	307,877
Temp Erosion Control		*/sf*		*16,025*		*291,852*							*/sf*	*307,877*
2446.100 Pipe Bore and Jack														
Pipe Boring 36" Casing, Mona Res, Station 344+00	100.00 lf	248.00 /lf	248.00 /lf	24,800	302.00 /lf	30,200			187.00 /lf	18,700	-	-	737.00 /lf	73,700
Receiving Pits	1.00 ea	450.00 /ea	450.00 /ea	450	1,530.00 /ea	1,530	-		1,580.00 /ea	1,580	-	-	3,560.00 /ea	3,560
Entry Pit	1.00 ea	3,430.00 /ea	3,430.00 /ea	3,430	13,000.00 /ea	13,000	-		13,450.00 /ea	13,450	-	-	29,880.00 /ea	29,880
Pipe Bore and Jack		*/lf*		*28,680*		*44,730*				*33,730*			*/lf*	*107,140*
2502.014 Pipe Bedding														
Utility Bed Gravel-Crushed	12,560.00 cy	2.86 /cy	96.64 /cd	35,922	10.00 /cy	138,160	-		1.74 /cy	21,854	-	-	15.60 /cy	195,936
Pipe Bedding		*/cy*		*35,922*		*138,160*				*21,854*			*/cy*	*195,936*
2630.006 Catch Basin 6'														
4" Blow-Off Drainage System, 197+50	1.00 ea		/ch		/ea		17,200		/ch		-	-	17,200.00 /ea	17,200
4" Blow-Off Drainage System, 344+00	1.00 ea		/ch		/ea		17,200		/ch		-	-	17,200.00 /ea	17,200
Catch Basin 6'		*/ea*					*34,400*						*/ea*	*34,400*
2740.120 Asphalt Paving - SY														
Compacted Base 12"	21,170.00 sy	-	-	-	-	-	443,088		-	-	-	-	20.93 /sy	443,088
Asphalt Paving - SY		*/sy*					*443,088*						*/sy*	*443,088*
2950.000 SITE RESTORATION														
Restore Landscaping	487.00 msf	30.00 /msf	30.00 /msf	14,610	50.00 /msf	24,350	-		20.00 /msf	9,740	-	-	100.00 /msf	48,700
SITE RESTORATION		*/msf*		*14,610*		*24,350*				*9,740*			*/msf*	*48,700*
15230.301 XH Pipe PE														
24" Steel Pipe, 300 psi, Mortar Lined & Coated	22,110.00 lf	24.50 /lf	16.78 /mh	541,694	65.95 /lf	1,458,155	-		12.00 /lf	265,320	-	-	102.45 /lf	2,265,169
Welding per Joint - 24"	469.00 ea	541.00 /ea	541.00 /ea	253,729	62.50 /ea	29,313	-		50.00 /ea	23,450	-	-	653.50 /ea	306,492

Spreadsheet Level	Takeoff Quantity	Labor Cost/Unit	Labor Price	Labor Amount	Material Price	Material Amount	Sub Amount	Sub Name	Equip Price	Equip Amount	Other Price	Other Amount	Total Cost/Unit	Total Amount
XH Pipe PE		*/lf*		*795,423*		*1,487,467*				*288,770*			*/lf*	*2,571,660*
15230.314 Pipe Fittings														
24" Pipe Fittings	6.00 ea	1,050.00 /ea	16.78 /mh	6,300	1,770.00 /ea	10,620	-		175.00 /ea	1,050	-	-	2,995.00 /ea	17,970
Pipe Fittings		*/ea*		*6,300*		*10,620*				*1,050*			*/ea*	*17,970*
15230.340 Turn Outs, Drains, Air Re														
Drain Vault, 4"	2.00 ea	8,997.00 /ea	8,997.00 /ea	17,994	11,041.00 /ea	22,082	-		2,080.00 /ea	4,160	-	-	22,118.00 /ea	44,236
Air Vacuum/Air Release Vault, 6"	1.00 ea	5,078.00 /ea	5,078.00 /ea	5,078	21,428.00 /ea	21,428	-		757.00 /ea	757	-	-	27,263.00 /ea	27,263
Air Release Vault, 1"	13.00 ea	2,937.00 /ea	2,937.00 /ea	38,181	6,158.00 /ea	80,054	-		479.00 /ea	6,227	-	-	9,574.00 /ea	124,462
Turn Outs, Drains, Air Re		*/ea*		*61,253*		*123,564*				*11,144*			*/ea*	*195,961*
16151.110 Cathodic Protection														
Cathodic Protection, Impressed Current	22,110.00 lf		/mh		/lf		22,110		-	-	-	-	1.00 /lf	22,110
Joint Seal	469.00 ea		/mh		/ea		58,625		-	-	-	-	125.00 /ea	58,625
Joint Bond	469.00 ea		/mh		/ea		28,140		-	-	-	-	60.00 /ea	28,140
Test Station at 1000 LF	22.00 ea		/mh		/ea		8,800		-	-	-	-	400.00 /ea	8,800
Cathodic Protection		*/lf*					*117,675*						*/lf*	*117,675*
503 Station 128+00 to 349+10				**1,251,402**		**2,167,993**	**595,163**			**622,236**				**4,636,794**
504 Station 349+10 to 378+00														
2240.120 Dewatering														
Well point Dewatering	0.50 mo	24,400.00 /mo	18.00 /mh	12,200	10,500.00 /mo	5,250	-		/mo		-	-	34,900.00 /mo	17,450
Dewatering		*/mo*		*12,200*		*5,250*							*/mo*	*17,450*
2316.202 Pipe Excavation														
Excavate Silt-Clay, Loam, Hydraulic Hoe	7,480.00 cy	0.94 /cy	140.08 /cd	7,031	-	-	-		1.60 /cy	11,968	-	-	2.54 /cy	18,999
Backfill and Compact, Machine	6,955.00 cy	1.53 /cy	140.08 /cd	10,641	-	-	-		0.89 /cy	6,190	-	-	2.42 /cy	16,831
Excess Material, 5 Mile Haul, Offsite	2,155.00 cy	2.86 /cy	140.08 /cd	6,163	-	-	-		7.01 /cy	15,107	-	-	9.87 /cy	21,270
Pipe Excavation		*/cy*		*23,836*						*33,265*			*/cy*	*57,100*
2370.150 Temp Erosion Control														
Erosion Control Mats-Slopes	17,245.00 sf	0.12 /sf	12.08 /ch	2,083	2.00 /sf	37,939	-		-	-	-	-	2.32 /sf	40,022
Temp Erosion Control		*/sf*		*2,083*		*37,939*							*/sf*	*40,022*
2502.014 Pipe Bedding														
Utility Bed Gravel-Crushed	1,630.00 cy	2.86 /cy	96.64 /cd	4,662	10.00 /cy	17,930	-		1.74 /cy	2,836	-	-	15.60 /cy	25,428
Pipe Bedding		*/cy*		*4,662*		*17,930*				*2,836*			*/cy*	*25,428*
2740.120 Asphalt Paving - SY														
Compacted Base 12", 1000 LF by 20'	2,000.00 sy	-	-	-	-	-	41,860		-	-	-	-	20.93 /sy	41,860
Asphalt Paving - SY		*/sy*					*41,860*						*/sy*	*41,860*
2950.000 SITE RESTORATION														
Restore Landscaping	35.00 msf	30.00 /msf	30.00 /msf	1,050	50.00 /msf	1,750	-		20.00 /msf	700	-	-	100.00 /msf	3,500
SITE RESTORATION		*/msf*		*1,050*		*1,750*				*700*			*/msf*	*3,500*

15230.301 XH Pipe PE

Spreadsheet Level	Takeoff Quantity	Labor Cost/Unit	Labor Price	Labor Amount	Material Price	Material Amount	Sub Amount	Sub Name	Equip Price	Equip Amount	Other Price	Other Amount	Total Cost/Unit	Total Amount
15230.301 XH Pipe PE														
24" Steel Pipe, 300 ps., Mortar Lined & Coatec	2,890.00 lf	24.50 /lf	16.78 /mh	70,805	65.95 /lf	190,596	-		12.00 /lf	34,680	-	-	102.45 /lf	296,080
Welding per Joint - 24"	65.00 ea	894.00 /ea	894.00 /ea	58,110	62.50 /ea	4,063	-		50.00 /ea	3,250	-	-	1,006.50 /ea	65,423
XH Pipe PE		*/lf*		*128,915*		*194,658*				*37,930*			*/lf*	*361,503*
15230.314 Pipe Fittings														
24" Pipe Fittings	3.00 ea	1,050.00 /ea	16.78 /mh	3,150	1,770.00 /ea	5,310	-		175.00 /ea	525	-	-	2,995.00 /ea	8,985
Pipe Fittings		*/ea*		*3,150*		*5,310*				*525*			*/ea*	*8,985*
15230.340 Turn Outs, Drains, Air Re														
Drain Vault, 4"	1.00 ea	8,997.00 /ea	8,997.00 /ea	8,997	11,041.00 /ea	11,041	-		2,080.00 /ea	2,080	-	-	22,118.00 /ea	22,118
Air Vacuum/Air Release Vault 6"	1.00 ea	5,078.00 /ea	5,078.00 /ea	5,078	21,428.00 /ea	21,428	-		757.00 /ea	757	-	-	27,263.00 /ea	27,263
Air Release Vault, 1"	2.00 ea	2,937.00 /ea	2,937.00 /ea	5,874	6,158.00 /ea	12,316	-		479.00 /ea	958	-	-	9,574.00 /ea	19,148
Turn Outs, Drains, Air Re		*/ea*		*19,949*		*44,785*				*3,795*			*/ea*	*68,529*
16151.110 Cathodic Protection														
Cathodic Protection, Impressed Current	2,890.00 lf		/mh		/lf		2,890		-	-	-	-	1.00 /lf	2,890
Joint Seal	65.00 ea		/mh		/ea		8,125		-	-	-	-	125.00 /ea	8,125
Joint Bond	65.00 ea		/mh		/ea		3,900		-	-	-	-	60.00 /ea	3,900
Test Station at 1000 LF	3.00 ea		/mh		/ea		1,200		-	-	-	-	400.00 /ea	1,200
Cathodic Protection		*/lf*					*16,115*						*/lf*	*16,115*
504 Station 349+10 to 378+00				**195,845**		**307,622**	**57,975**			**79,951**				**640,492**
505 Station 378+00 to 419+10														
2240.120 Dewatering														
Wellpoint Dewatering	1.00 mo	24,400.00 /mo	18.00 /mh	24,400	10,500.00 /mo	10,500	-		/mo		-	-	34,900.00 /mo	34,900
Dewatering		*/mo*		*24,400*		*10,500*							*/mo*	*34,900*
2316.202 Pipe Excavation														
Excavate Silt-Clay, Loam, Hydraulic Hoe	10,470.00 cy	0.94 /cy	140.08 /cd	9,842	-	-	-		1.60 /cy	16,752	-	-	2.54 /cy	26,594
Backfill and Compact, Machine	9,730.00 cy	1.53 /cy	140.08 /cd	14,887	-	-	-		0.89 /cy	8,660	-	-	2.42 /cy	23,547
Excess Material, 5 Mile Haul, Offsite	3,010.00 cy	2.86 /cy	140.08 /cd	8,609	-	-	-		7.01 /cy	21,100	-	-	9.87 /cy	29,709
Pipe Excavation		*/cy*		*33,337*						*46,512*			*/cy*	*79,849*
2370.150 Temp Erosion Control														
Erosion Control Mats-Slopes	24,140.00 sf	0.12 /sf	12.08 /ch	2,916	2.00 /sf	53,108	-		-	-	-	-	2.32 /sf	56,024
Temp Erosion Control		*/sf*		*2,916*		*53,108*							*/sf*	*56,024*
2502.014 Pipe Bedding														
Utility Bed Gravel-Crushed	2,280.00 cy	2.86 /cy	96.64 /cd	6,521	10.00 /cy	25,080	-		1.74 /cy	3,967	-	-	15.60 /cy	35,568
Pipe Bedding		*/cy*		*6,521*		*25,080*				*3,967*			*/cy*	*35,568*
2740.120 Asphalt Paving - SY														
Compacted Base 12", 2000 LF by 20'	4,000.00 sy	-	-	-	-	-	83,720		-	-	-	-	20.93 /sy	83,720
Asphalt Paving - SY		*/sy*					*83,720*						*/sy*	*83,720*
2950.000 SITE RESTORATION														
Restore Landscaping	49.00 msf	30.00 /msf	30.00 /msf	1,470	50.00 /msf	2,450	-		20.00 /msf	980	-	-	100.00 /msf	4,900

Spreadsheet Level	Takeoff Quantity	Labor Cost/Unit	Labor Price	Labor Amount	Material Price	Material Amount	Sub Amount	Sub Name	Equip Price	Equip Amount	Other Price	Other Amount	Total Cost/Unit	Total Amount
SITE RESTORATION		*/msf*		*1,470*		*2,450*				*980*			*/msf*	*4,900*
15230.301 XH Pipe PE														
24" Steel Pipe, 150 psi, Mortar Lined & Coated	4,110.00 lf	24.50 /lf	16.78 /mh	100,695	65.95 /lf	271,055	-		12.00 /lf	49,320	-	-	102.45 /lf	421,069
Welding per Joint - 24"	93.00 ea	894.00 /ea	894.00 /ea	83,142	62.50 /ea	5,813	-		50.00 /ea	4,650	-	-	1,006.50 /ea	93,605
XH Pipe PE		*/lf*		*183,837*		*276,867*				*53,970*			*/lf*	*514,574*
15230.314 Pipe Fittings														
24" Pipe Fittings	5.00 ea	1,050.00 /ea	16.78 /mh	5,250	1,770.00 /ea	8,850	-		175.00 /ea	875	-	-	2,995.00 /ea	14,975
Pipe Fittings		*/ea*		*5,250*		*8,850*				*875*			*/ea*	*14,975*
505 Station 378+00 to 419+10				**257,731**		**376,855**	**83,720**			**105,304**				**824,610**
506 Mona Reservoir Pressure Reducing Vault														
2519.310 Dresser Couplings														
Dresser Couplings 18"	6.00 ea	22.82 /ea	45.64 /ch	137	1,800.00 /ea	10,800	-		/ch		-	-	1,822.82 /ea	10,937
Dresser Couplings 24"	2.00 ea	22.82 /ea	45.64 /ch	46	2,400.00 /ea	4,800	-		/ch		-	-	2,422.82 /ea	4,846
Dresser Couplings		*/ea*		*183*		*15,600*							*/ea*	*15,783*
2531.004 Manholes 4'														
Manhole 4' Flat Cover	1.00 ea	45.69 /ea	45.69 /ch	46	90.00 /ea	90	-		40.00 /ch	40	-	-	175.69 /ea	176
Manholes 4'		*/ea*		*46*		*90*				*40*			*/ea*	*176*
3100.120 Forms- S-O-G														
S.O.G. Edge Form < 1'	96.00 sf	1.41 /sf	15.68 /mh	135	0.75 /sf	76	-		-	-	-	-	2.20 /sf	211
Forms- S-O-G		*/sf*		*135*		*76*							*/sf*	*211*
3100.124 Forms- Suspended Slab														
Form Suspended Slab 0-15'	540.00 sf	1.41 /sf	15.68 /mh	762	1.00 /sf	567	-		-	-	-	-	2.46 /sf	1,329
Floor Opening Forms	32.00 lf	1.41 /lf	15.68 /mh	45	0.50 /lf	17	-		-	-	-	-	1.94 /lf	62
Slab Edge Form < 1'	96.00 sf	1.08 /sf	15.68 /mh	104	2.00 /sf	202	-		-	-	-	-	3.18 /sf	305
Forms- Suspended Slab		*/sf*		*911*		*785*							*/sf*	*1,696*
3100.190 Forms- Wall Forms														
Rented Form System 12-16'	2,688.00 sf	2.34 /sf	15.68 /mh	6,279	1.25 /sf	3,528	-		-	-	-	-	3.65 /sf	9,807
Forms- Wall Forms		*/sf*		*6,279*		*3,528*							*/sf*	*9,807*
3100.310 Forms- Strip & Oil														
Strip & Oil Suspended Slab Frm	540.00 sf	0.06 /sf	12.08 /mh	33	-	-	-		-	-	-	-	0.06 /sf	33
Strip & Oil Wall Forms	2,688.00 sf	0.06 /sf	12.08 /mh	162	-	-	-		-	-	-	-	0.06 /sf	162
Strip & Oil SOG Form	96.00 sf	0.06 /sf	12.08 /mh	6	-	-	-		-	-	-	-	0.06 /sf	6
Forms- Strip & Oil		*/sf*		*201*									*/sf*	*201*
3150.192 Forms- Wall Access														
Wall Bulkhead Forms	112.00 sf	4.70 /sf	15.68 /mh	527	1.00 /sf	118	-		-	-	-	-	5.75 /sf	644
Forms- Wall Access		*/ls*		*527*		*118*							*/ls*	*644*
3150.198 Forms- Wall Inserts														
Pour Strips	636.00 lf	0.78 /lf	15.68 /mh	499	0.18 /lf	120	-		-	-	-	-	0.97 /lf	619
Forms- Wall Inserts		*/ls*		*499*		*120*							*/ls*	*619*
3210.104 Rebar- by Lbs/CY														
SOG Rebar	0.50 tn	170.60 /tn	17.06 /mh	85	560.00 /tn	294	-		-	-	-	-	758.60 /tn	379

Spreadsheet Level	Takeoff Quantity	Labor Cost/Unit	Labor Price	Labor Amount	Material Price	Material Amount	Sub Amount	Sub Name	Equip Price	Equip Amount	Other Price	Other Amount	Total Cost/Unit	Total Amount
3210.104 Rebar- by Lbs/CY														
Wall Rebar	1.25 tn	170.60 /tn	17.06 /mh	212	560.00 /tn	732	-		-	-	-	-	758.49 /tn	944
Suspended Slab Rebar	1.00 tn	170.60 /tn	17.06 /mh	171	560.00 /tn	588	-		-	-	-	-	758.60 /tn	759
Rebar- by Lbs/CY		*/ton*		*468*		*1,614*							*/ton*	*2,092*
3220.110 Wire Mesh- Rolls														
Mesh Support - bricks	77.00 ea	0.03 /ea	17.06 /mh	3	0.18 /ea	15	-		-	-	-	-	0.22 /ea	17
Wire Mesh- Rolls		*/sf*		*3*		*15*							*/sf*	*17*
3310.100 Concrete- Buy														
3500 psi Concrete	20.00 cy	-	-	-	71.00 /cy	1,491	-		-	-	-	-	74.55 /cy	1,491
3500 psi Concrete	49.78 cy	-	-	-	71.00 /cy	3,711	-		-	-	-	-	74.55 /cy	3,711
3500 psi Concrete	20.00 cy	-	-	-	71.00 /cy	1,491	-		-	-	-	-	74.55 /cy	1,491
Concrete- Buy		*/cy*				*6,693*							*/cy*	*6,693*
3310.230 Place- S-O-G														
Pump Place Slab on Grade	20.00 cy	7.38 /cy	14.75 /mh	148	-	-	-		-	-	-	-	7.38 /cy	148
Place- S-O-G		*/cy*		*148*									*/cy*	*148*
3310.240 Place- Suspended Slab														
Crane Place Suspended Slab	20.00 cy	10.31 /cy	14.75 /mh	206	-	-	-		-	-	-	-	10.31 /cy	206
Place- Suspended Slab		*/cy*		*206*									*/cy*	*206*
3310.260 Place- Walls														
Pump Place Walls	49.78 cy	10.31 /cy	14.75 /mh	513	-	-	-		-	-	-	-	10.31 /cy	513
Place- Walls		*/cy*		*513*									*/cy*	*513*
3350.110 Finish Flatwork														
Finish- Hard Trowel	540.00 sf	0.21 /sf	14.18 /mh	114	0.03 /sf	16	-		-	-	-	-	0.24 /sf	130
Finish- Hard Trowel	540.00 sf	0.21 /sf	14.18 /mh	114	0.03 /sf	16	-		-	-	-	-	0.24 /sf	130
Finish- Top of Wall & Curb	96.00 sf	0.11 /sf	14.18 /mh	11	-	-	-		-	-	-	-	0.11 /sf	11
Finish Flatwork		*/sf*		*239*		*32*							*/sf*	*271*
3350.130 Patch & Grind														
Grind/Patch Walls	2,688.00 sf	0.18 /sf	12.08 /mh	484	0.01 /sf	27	-		-	-	-	-	0.19 /sf	511
Patch & Grind		*/sf*		*484*		*27*							*/sf*	*511*
3390.170 Curing														
Liquid Curing Compounds	540.00 sf	0.02 /sf	12.08 /mh	13	0.01 /sf	6	-		-	-	-	-	0.04 /sf	19
Liquid Curing Compounds	2,688.00 sf	0.02 /sf	12.08 /mh	65	0.01 /sf	28	-		-	-	-	-	0.04 /sf	93
Liquid Curing Compounds	540.00 sf	0.02 /sf	12.08 /mh	13	0.01 /sf	6	-		-	-	-	-	0.04 /sf	19
Curing		*/sf*		*91*		*40*							*/sf*	*131*
3390.180 Hardener														
Seal Floors	540.00 sf	0.02 /sf	12.08 /mh	13	0.05 /sf	28	-		-	-	-	-	0.08 /sf	41
Hardener		*/sf*		*13*		*28*							*/sf*	*41*
5510.100 Stairs & Ladders														
Rd Ladder	1.00 ea	20.82 /ea	41.64 /mh	21	75.00 /ea	75	-		-	-	-	-	95.82 /ea	96
Stairs & Ladders		*/ls*		*21*		*75*							*/ls*	*96*

Spreadsheet Level	Takeoff Quantity	Labor Cost/Unit	Labor Price	Labor Amount	Material Price	Material Amount	Sub Amount	Sub Items	Equip Price	Equip Amount	Other Price	Other Amount	Total Cost/Unit	Total Amount
11295.010 Valves- Butterfly Flange														
Flge Btfly Valve/Elect Oper 8"	6.00 ea	106.04 /ea	13.26 /mh	636	5,000.00 /ea	30,000	-		-	-	-	-	5,106.04 /ea	30,636
Valves- Butterfly Flange		*/ea*		*636*		*30,000*							*/ea*	*30,636*
11295.020 Valves- Regulating														
8" Sleeve Valve	2.00 ea	106.04 /ea	13.26 /mh	212	21,600.00 /ea	43,200	-		-	-	-	-	21,706.04 /ea	43,412
Valves- Regulating		*/ls*		*212*		*43,200*							*/ls*	*43,412*
15060.200 Pipe Support														
Pipe Support	6.00 ea	22.00 /ea	22.00 /ea	132	109.41 /ea	656	-		-	-	-	-	131.41 /ea	788
Pipe Support		*/ea*		*132*		*656*							*/ea*	*788*
15120.002 Bolt - Nut & Gasket Sets														
Seal, Pipe Inlet	3.00 ea	100.00 /ea	100.00 /ea	300	220.00 /ea	660	-		-	-	-	-	320.00 /ea	960
Bolt - Nut & Gasket Sets		*/ea*		*300*		*660*							*/ea*	*960*
15120.020 Exp Joint Flange SS														
8" Flow Meter	2.00 ea	250.00 /ea	250.00 /ea	500	2,700.00 /ea	5,400	-		/ea		-	-	2,950.00 /ea	5,900
Exp Joint Flange SS		*/ea*		*500*		*5,400*							*/ea*	*5,900*
15230.201 Std Wt Pipe PE														
CS Sch 40 A53 SMLS PE 18"	40.00 lf	13.42 /lf	16.78 /mh	537	16,042.00 /C	6,417	-		-	-	-	-	173.84 /lf	6,954
Std Wt Pipe PE		*/lf*		*537*		*6,417*							*/lf*	*6,954*
15230.213 CS Std Wt 45 Ell														
CS Std Wt 45 Ell LR 18	2.00 ea	188.44 /ea	16.78 /mh	377	1,082.00 /ea	2,164	-		-	-	-	-	1,270.44 /ea	2,541
CS Std Wt 45 Ell		*/ea*		*377*		*2,164*							*/ea*	*2,541*
15230.220 CS Std Wt Tee														
CS Std Wt Tee 24x18	2.00 ea	361.44 /ea	16.78 /mh	723	5,383.00 /ea	10,766	-		-	-	-	-	5,744.44 /ea	11,489
CS Std Wt Tee		*/ea*		*723*		*10,766*							*/ea*	*11,489*
15230.230 CS Std Wt Con Red														
CS Std Wt Con Red 24x18	2.00 ea	176.19 /ea	16.78 /mh	352	1,205.00 /ea	2,410	-		-	-	-	-	1,381.19 /ea	2,762
CS Std Wt Con Red		*/ea*		*352*		*2,410*							*/ea*	*2,762*
15820.002 Duct Accessories														
Intake Duct	1.00 ea	150.00 /ea	150.00 /ea	150	200.00 /ea	200	-		-	-	-	-	350.00 /ea	350
Duct Accessories		*/ls*		*150*		*200*							*/ls*	*350*
15830.002 Fans														
Exhaust Fan	1.00 ea	250.00 /ea	250.00 /ea	250	2,500.00 /ea	2,500	-		-	-	-	-	2,750.00 /ea	2,750
Fans		*/ls*		*250*		*2,500*							*/ls*	*2,750*
16000.001 Electrical Sub														
120 Volt Meter/Disconnect/Wire	1.00 ls	-	-	-	-	-	15,000		-	-	-	-	15,000.00 /ls	15,000
Remote Telemetry/Antenna/Wiring	1.00 ls	-	-	-	-	-	***20,000***		-	-	-	-	20,000.00 /ls	20,000
Electrical Sub		*/sf*					*35,000*						*/sf*	*35,000*
506 Mona Reservoir Pressure Reducing Vault				**15,135**		**133,214**	**35,000**			**40**				**183,388**

Spreadsheet Level	Takeoff Quantity	Labor Cost/Unit	Labor Price	Labor Amount	Material Price	Material Amount	Sub Amount	Sub Name	Equip Price	Equip Amount	Other Price	Other Amount	Total Cost/Unit	Total Amount
507 Mona Reservoir Discharge Structure														
2370.100 Rip Rap														
Rip Rap Machine Place	550.00 sf	0.83 /sf	41.67 /ch	458	5.00 /sf	2,750	-		35.00 /ch	385	-	-	6.53 /sf	3,593
Rip Rap		*/sf*		*458*		*2,750*				*385*			*/sf*	*3,593*
2531.004 Manholes 4'														
Manhole 4' Flat Cover	1.00 ea	45.69 /ea	45.69 /ch	46	90.00 /ea	90	-		40.00 /ch	40	-	-	175.69 /ea	176
Manholes 4'		*/ea*		*46*		*90*				*40*			*/ea*	*176*
2740.830 Paving Textiles														
Geo Textile	150.00 sy	0.03 /sy	12.08 /ch	5	2.00 /sy	330	-		-	-	-	-	2.23 /sy	335
Paving Textiles		*/sy*		*5*		*330*							*/sy*	*335*
3100.120 Forms- S-O-G														
S.O.G. Edge Form < 1'	80.00 sf	1.41 /sf	15.68 /mh	113	0.75 /sf	63	-		-	-	-	-	2.20 /sf	176
Forms- S-O-G		*/sf*		*113*		*63*							*/sf*	*176*
3100.124 Forms- Suspended Slab														
Form Suspended Slab 0-15'	200.00 sf	1.41 /sf	15.68 /mh	282	1.00 /sf	210	-		-	-	-	-	2.46 /sf	492
Floor Opening Forms	50.00 lf	1.41 /lf	15.68 /mh	71	0.50 /lf	26	-		-	-	-	-	1.94 /lf	97
Slab Edge Form < 1'	96.00 sf	1.08 /sf	15.68 /mh	104	2.00 /sf	202	-		-	-	-	-	3.18 /sf	305
Forms- Suspended Slab		*/sf*		*457*		*438*							*/sf*	*894*
3100.180 Forms- Wall Forms														
Rented Form System 12-16'	1,680.00 sf	2.34 /sf	15.68 /mh	3,924	1.25 /sf	2,205	-		-	-	-	-	3.65 /sf	6,129
Forms- Wall Forms		*/sf*		*3,924*		*2,205*							*/sf*	*6,129*
3100.310 Forms- Strip & Oil														
Strip & Oil- Suspended Slab Frm	200.00 sf	0.06 /sf	12.08 /mh	12	-	-	-		-	-	-	-	0.06 /sf	12
Strip & Oil Wall Forms	1,680.00 sf	0.06 /sf	12.08 /mh	101	-	-	-		-	-	-	-	0.06 /sf	101
Strip & Oil SOG Form	80.00 sf	0.06 /sf	12.08 /mh	5	-	-	-		-	-	-	-	0.06 /sf	5
Forms- Strip & Oil		*/sf*		*118*									*/sf*	*118*
3150.192 Forms- Wall Access														
Wall Bulkhead Forms	84.00 sf	4.70 /sf	15.68 /mh	395	1.00 /sf	88	-		-	-	-	-	5.75 /sf	483
Forms- Wall Access		*/fs*		*395*		*88*							*/fs*	*483*
3150.198 Forms- Wall Inserts														
Pour Strips	296.00 lf	0.78 /lf	15.68 /mh	232	0.18 /lf	56	-		-	-	-	-	0.97 /lf	288
Forms- Wall Inserts		*/fs*		*232*		*56*							*/fs*	*288*
3210.104 Rebar- by Lbs/CY														
SOG Rebar	0.37 tn	170.60 /tn	17.06 /mh	63	560.00 /tn	218	-		-	-	-	-	759.35 /tn	281
Wall Rebar	0.78 tn	170.60 /tn	17.06 /mh	133	560.00 /tn	458	-		-	-	-	-	758.68 /tn	590
Suspended Slab Rebar	0.37 tn	170.60 /tn	17.06 /mh	63	560.00 /tn	218	-		-	-	-	-	759.35 /tn	281
Rebar- by Lbs/CY		*/ton*		*259*		*893*							*/ton*	*1,152*
3220.110 Wire Mesh- Rolls														
Mesh Support - bricks	59.00 ea	0.03 /ea	17.06 /mh	2	0.18 /ea	11	-		-	-	-	-	0.22 /ea	13
Wire Mesh- Rolls		*/sf*		*2*		*11*							*/sf*	*13*

Spreadsheet Level	Takeoff Quantity	Labor Cost/Unit	Labor Price	Labor Amount	Material Price	Material Amount	Sub Amount	Sub Name	Equip Price	Equip Amount	Other Price	Other Amount	Total Cost/Unit	Total Amount
3310.100 Concrete- Buy														
3500 psi Concrete	14.82 cy	-	-	-	71.00 /cy	1,104	-		-	-	-	-	74.55 /cy	1,104
3500 psi Concrete	31.11 cy	-	-	-	71.00 /cy	2,319	-		-	-	-	-	74.55 /cy	2,319
3500 psi Concrete	7.41 cy	-	-	-	71.00 /cy	552	-		-	-	-	-	74.55 /cy	552
Concrete- Buy		*/cy*				*3,976*							*/cy*	*3,976*
3310.230 Place- S-O-G														
Truck Place Slab on Grade	14.82 cy	6.64 /cy	14.75 /mh	98	-	-	-		-	-	-	-	6.64 /cy	98
Place- S-O-G		*/cy*		*98*									*/cy*	*98*
3310.240 Place- Suspended Slab														
Crane Place Suspended Slab	7.41 cy	10.31 /cy	14.75 /mh	76	-	-	-		-	-	-	-	10.31 /cy	76
Place- Suspended Slab		*/cy*		*76*									*/cy*	*76*
3310.260 Place- Walls														
Pump Place Walls	31.11 cy	10.31 /cy	14.75 /mh	321	-	-	-		-	-	-	-	10.31 /cy	321
Place- Walls		*/cy*		*321*									*/cy*	*321*
3350.110 Finish Flatwork														
Finish- Hard Trowel	400.00 sf	0.21 /sf	14.18 /mh	85	0.03 /sf	12	-		-	-	-	-	0.24 /sf	97
Finish- Hard Trowel	200.00 sf	0.21 /sf	14.18 /mh	42	0.03 /sf	6	-		-	-	-	-	0.24 /sf	48
Finish- Top of Wall & Curb	60.00 sf	0.11 /sf	14.18 /mh	7	-	-	-		-	-	-	-	0.11 /sf	7
Finish Flatwork		*/sf*		*134*		*18*							*/sf*	*152*
3350.130 Patch & Grind														
Grind/Patch Walls	1,680.00 sf	0.18 /sf	12.08 /mh	302	0.01 /sf	17	-		-	-	-	-	0.19 /sf	319
Patch & Grind		*/sf*		*302*		*17*							*/sf*	*319*
3390.170 Curing														
Liquid Curing Compounds	400.00 sf	0.02 /sf	12.08 /mh	10	0.01 /sf	4	-		-	-	-	-	0.04 /sf	14
Liquid Curing Compounds	1,680.00 sf	0.02 /sf	12.08 /mh	41	0.01 /sf	18	-		-	-	-	-	0.04 /sf	58
Liquid Curing Compounds	200.00 sf	0.02 /sf	12.08 /mh	5	0.01 /sf	2	-		-	-	-	-	0.04 /sf	7
Curing		*/sf*		*55*		*24*							*/sf*	*79*
3390.180 Hardener														
Seal Floors	400.00 sf	0.02 /sf	12.08 /mh	10	0.05 /sf	21	-		-	-	-	-	0.08 /sf	31
Hardener		*/sf*		*10*		*21*							*/sf*	*31*
5510.100 Stairs & Ladders														
Pit Ladder	1.00 ea	20.82 /ea	41.64 /mh	21	75.00 /ea	75	-		-	-	-	-	95.82 /ea	96
Stairs & Ladders		*/ls*		*21*		*75*							*/ls*	*96*
5530.200 Grating- Steel Galvanized														
Gal Steel Floor Grating 1.25"	100.00 sf	0.57 /sf	16.14 /mh	56	5.00 /sf	500	-		-	-	-	-	5.57 /sf	556
Grating- Steel Galvanized		*/sf*		*56*		*500*							*/sf*	*556*
11392.010 Weirs														
Weir, Steel	20.00 lf	232.47 /lf	15.50 /mh	4,649	2.50 /lf	50	-		-	-	-	-	234.97 /lf	4,699
Weirs		*/ea*		*4,649*		*50*							*/ea*	*4,699*

Spreadsheet Level	Takeoff Quantity	Labor Cost/Unit	Labor Price	Labor Amount	Material Price	Material Amount	Sub Amount	Sub Name	Equip Price	Equip Amount	Other Price	Other Amount	Total Cost/Unit	Total Amount
15120.002 Bolt - Nut & Gasket Sets														
Seal, Pipe Inlet	1.00 ea	100.00 /ea	100.00 /ea	100	220.00 /ea	220	-		-	-	-	-	320.00 /ea	320
Bolt - Nut & Gasket Sets		/ea		100		220							/ea	320
507 Mona Reservoir				11,832		11,825				425				24,082
Discharge Structure														
11000 Santaquin Mona				***3,449,073***		***4,288,656***	***886,509***			***1,201,236***		***452,800***		***10,278,275***
Reservoir Pipeline Alt 2														

Partial Totals

Labor	3,449,073		129,426.656	hrs	
Material	4,288,656				
Subcontract	886,509				
Equipment	1,201,236		15,701.000	hrs	
Other	452,800				
	10,278,274	10,278,274			
GC's Labor Burden	328,608		32.000 %		C
Trade Labor Burden	678,208		28.000 %		C
Total w/Labor Burden	1,006,816	11,285,090			
Material Sales Tax	321,649		7.500 %		C
Subcontractor Bond	17,730		2.000 %		C
Equipment Fuel & Maintenance	288,297		24.000 %		C
Other Mark-up	31,696		7.000 %		C
Total Construction Value	659,372	11,944,462			
Profit	1,167,972		7.430 %		T
Contingency	2,388,893		20.000 %		T
Total Project w/o Ins/Bonds	3,556,865	15,501,327			
Builder's Risk Insurance	48,888		0.311 %		T
General Liability Insurance	78,598		0.500 %		T
Performance & Payment Bond	90,867				B
Project Total	218,353	15,719,680			
	Partial Total	***15,719,680***			

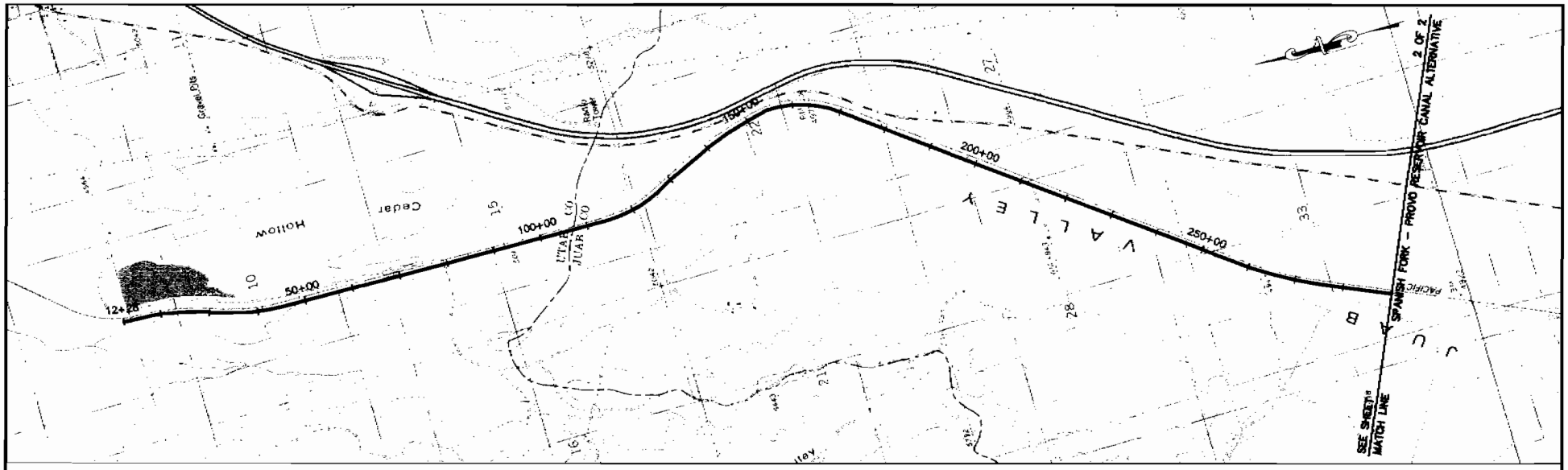

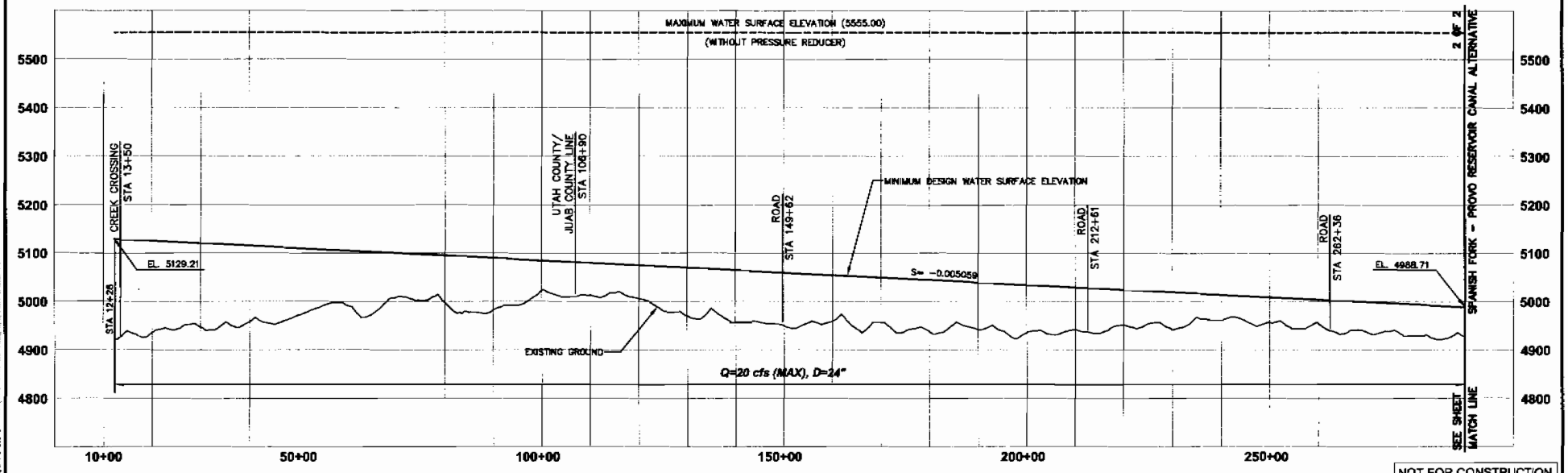

NOT FOR CONSTRUCTION

REV	DATE	BY	DESCRIPTION

SCALE: HORZ: 1" = 1000' VERT. 1" = 100'

WARNING 0 1/2 1 IF THIS BAR DOES NOT MEASURE 1" THEN DRAWING IS NOT TO SCALE.

DESIGNED
DRAWN
CHECKED

SUBMITTED
(PROJECT MANAGER'S NAME) R. C. E. NO. DATE
(COMPANY OFFICER'S NAME) R. C. E. NO. DATE

MWH
MONTGOMERY WATSON HARZA

CUP

CENTRAL UTAH WATER CONSERVANCY DISTRICT
SPANISH FORK - PROVO RESERVOIR CANAL ALTERNATIVE
SANTAQUIN - MONA RESERVOIR PIPELINE PLAN AND PROFILE
STA 12+28 TO STA 290+00

DRAWING NO. 9
DATE FEBRUARY 2004
DRAWING NO. ALT 2-MONA RES-1
SHEET NO. 1 OF 2

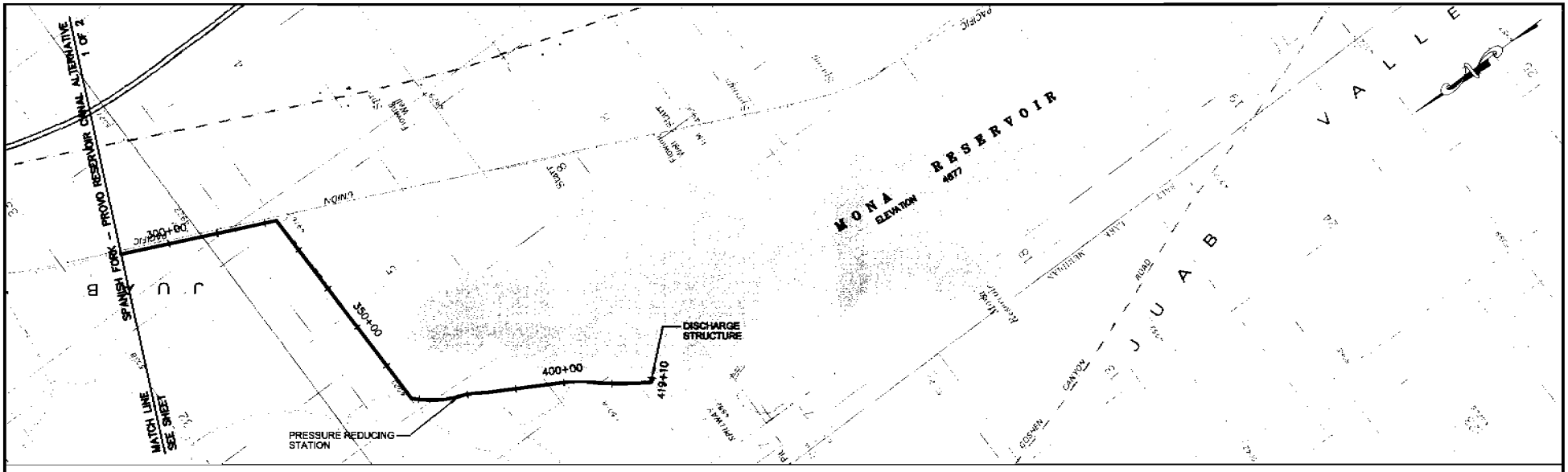

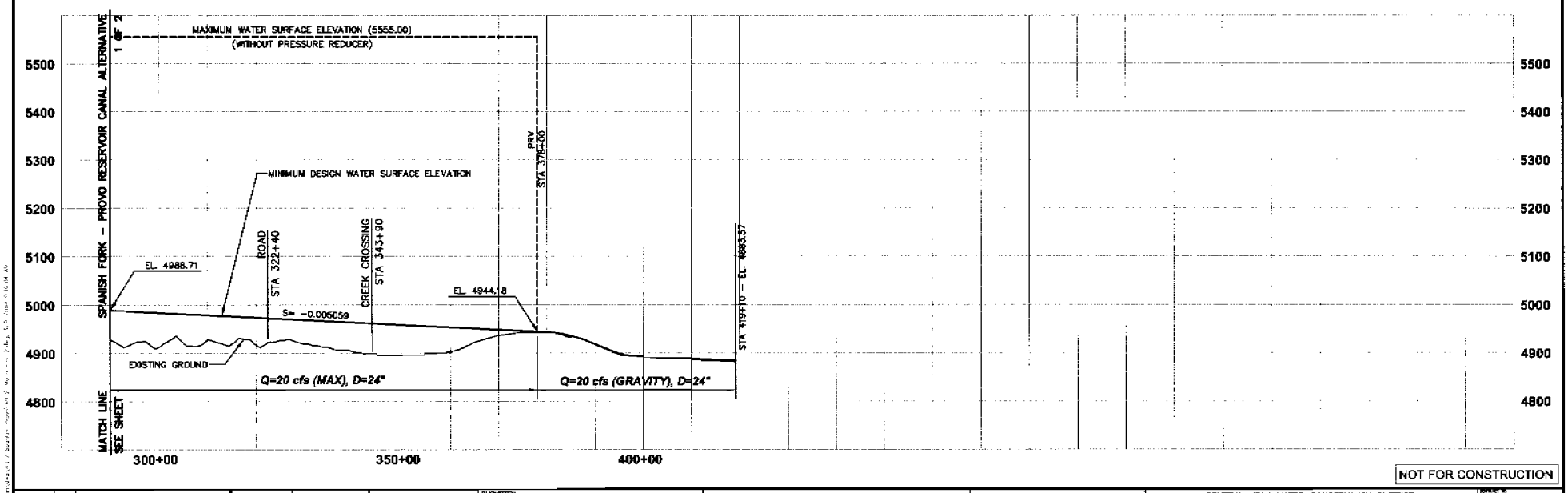

NOT FOR CONSTRUCTION

REV	DATE	BY	DESCRIPTION

SCALE: HORZ. 1" = 1000' VERT. 1" = 100'

WARNING: IF THIS BAR DOES NOT MEASURE 1" THEN DRAWING IS NOT TO SCALE.

DESIGNED
DRAWN
CHECKED

SUBMITTED
(PROJECT MANAGER'S NAME) R. C. E. NO. DATE
(COMPANY OFFICER'S NAME) R. C. E. NO. DATE

MWH
MONTGOMERY WATSON HARZA

CUP

CENTRAL UTAH WATER CONSERVANCY DISTRICT
SPANISH FORK – PROVO RESERVOIR CANAL ALTERNATIVE
SANTAQUIN – MONA RESERVOIR PIPELINE PLAN AND PROFILE
STA 290+00 TO STA 419+10

PROJECT NO. X
DATE FEBRUARY 2004
DRAWING NO. A.1 2-MONA RES-2
SHEET NO. 2 of 2

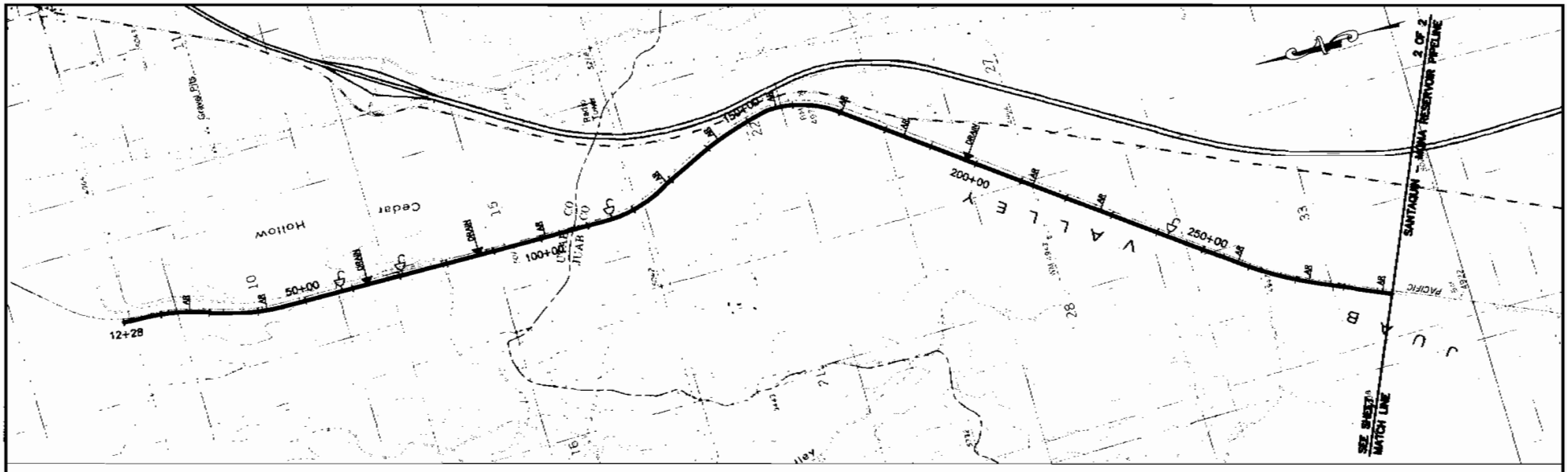

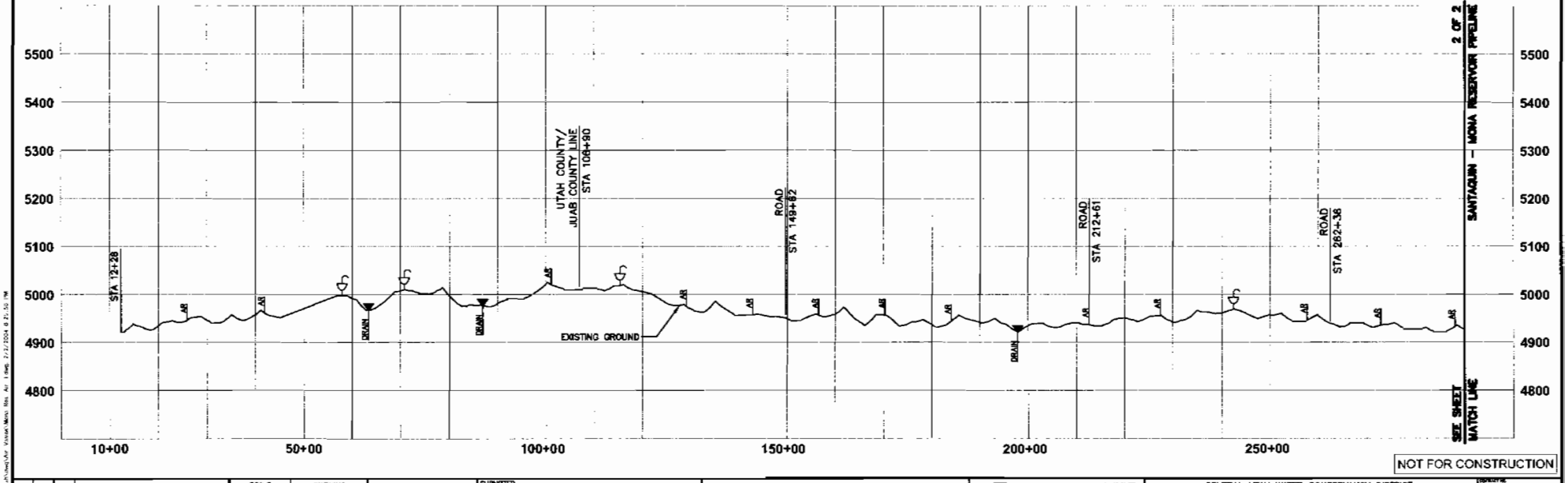

NOT FOR CONSTRUCTION

REV	DATE	BY	DESCRIPTION

SCALE:
HORZ: 1" = 1000'
VERT. 1" = 100'

WARNING
0 1/2 1
IF THIS BAR DOES NOT MEASURE 1" THEN DRAWING IS NOT TO SCALE.

DESIGNED
DRAWN
CHECKED

SUBMITTED
(PROJECT MANAGER'S NAME) R. C. E. NO. DATE
(COMPANY OFFICER'S NAME) R. C. E. NO. DATE

MWH
MONTGOMERY WATSON HARZA

CUP

CENTRAL UTAH WATER CONSERVANCY DISTRICT
AIR RELEASE, VACUUM, and DRAIN VALVES FOR ULS PIPELINES - ALTERNATIVES 1,2,3
SANTAQUIN - MONA RESERVOIR PIPELINE
STA 12+28 TO STA 290+00

DESIGN NO. K
DATE JANUARY 2004
DRAWING NO. MONA RES-AIR-1
SHEET NO. 1 of 2

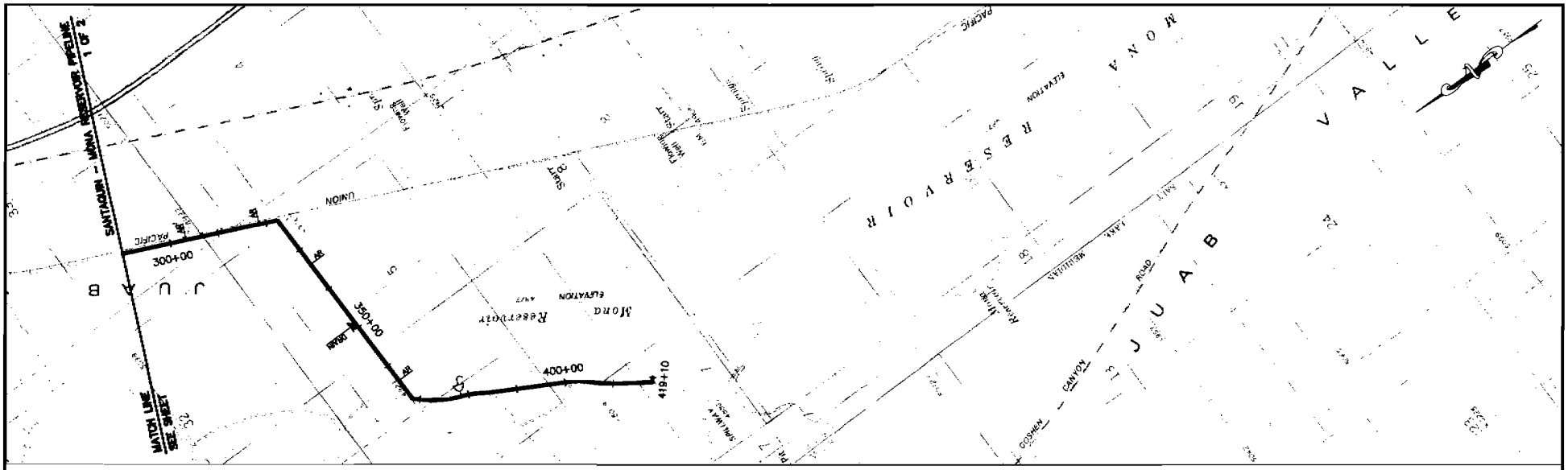

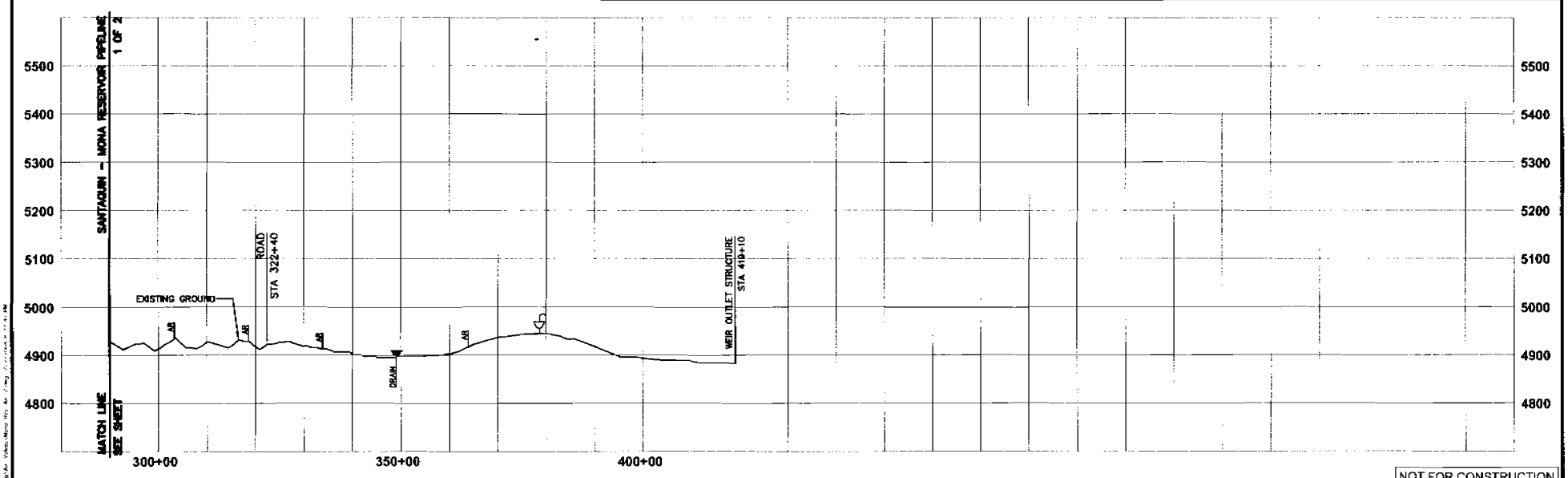

NOT FOR CONSTRUCTION

REV	DATE	BY	DESCRIPTION

SCALE:
HORZ: 1" = 1000'
VERT. 1" = 100'

WARNING
0 1/2 1
IF THIS BAR DOES NOT MEASURE 1" THEN DRAWING IS NOT TO SCALE.

DESIGNED
DRAWN
CHECKED

SUBMITTED
(PROJECT MANAGER'S NAME) R. C. E. NO. DATE
(COMPANY OFFICER'S NAME) R. C. E. NO. DATE

MWH
MONTGOMERY WATSON HARZA

CUP

CENTRAL UTAH WATER CONSERVANCY DISTRICT
AIR RELEASE, VACUUM, and DRAIN VALVES FOR ULS PIPELINES - ALTERNATIVES 1,2,3
SANTAQUIN - MONA RESERVOIR PIPELINE
STA 290+00 TO STA 419+10

PROJECT NO. X
DATE JANUARY 2004
MONA RES-AIR-2
SHEET NO. 2 OF 2

TABLE VIII-22

Santaquin-Mona Reservoir Pipeline

Station	Air Vacuum Valve		Air Release Valves		Blow-Off Drain Valves	
	Valve Size	Pressure Class	Valve Size	Pressure Class	Valve Size	Pressure Class
26+00			1	300		
42+00			1	300		
57+50	6	250	1	250		
63+00					4	250
71+00	6	250	1	250		
86+50					4	250
101+00			1	250		
115+00	6	250	1	250		
129+00			1	250		
142+50			1	300		
156+00			1	300		
170+00			1	300		
184+00			1	300		
197+50				300	4	300
212+50			1	300		
227+00			1	300		
242+00	6	250	1	250		
257+00			1	300		
272+50			1	300		
288+00			1	300		
303+00			1	300		
318+00			1	300		
333+50			1	300		
349+00					4	300
363+00			1	300		
378+00	6	300	1	300		

(Alternative 2) Crossing Tables for ULS

Table 8 - 5
Highway and Interstate Pipeline Crossings

Feature Name	Approximate Pipeline Station	Highway or Interstate	Crossing Technique
Spanish Fork – Santaquin Pipeline	13+21	US Highway 89	Jack/bore
Spanish Fork – Santaquin Pipeline	38+00	U.S. Highway 6	Jack/bore
Spanish Fork – Santaquin Pipeline	710+00	U.S. Highway 6/State Route 198	Jack/bore
Spanish Fork – Santaquin Pipeline	742+00	Interstate 15	Jack/bore
Spanish Fork – Santaquin Pipeline	882+00	U.S. Highway 6	Jack/bore
Spanish Fork – Provo Reservoir Canal Pipeline	945+00	U.S. Highway 189	Jack/bore
Spanish Fork – Provo Reservoir Canal Pipeline	1014+00	State Route 52	Jack/bore

Table 8-6
Railroad Crossings

Pipeline	Approximate Pipeline Station	Crossing Technique
Spanish Fork – Santaquin Pipeline	14+00	Jack/bore
Spanish Fork – Santaquin Pipeline	38+00	Jack/bore
Spanish Fork – Santaquin Pipeline	938+00	Jack/bore
Spanish Fork Canyon Pipeline	392+00	Jack/bore

Table 8-7
Stream, River and Canal Pipeline Crossings

Pipeline Name	Approximate Pipeline Station	Water Feature	Crossing Technique
Spanish Fork Canyon Pipeline	131+50	Creek	Jack/bore
Spanish Fork Canyon Pipeline	139+10	Creek	Jack/bore
Spanish Fork Canyon Pipeline	164+40	Creek	Jack/bore
Spanish Fork Canyon Pipeline	188+50	Creek	Jack/bore
Spanish Fork Canyon Pipeline	206+00	Creek	Jack/bore
Spanish Fork Canyon Pipeline	223+00	Creek	Jack/bore
Spanish Fork Canyon Pipeline	265+00	Creek	Jack/bore

Table 8-7
Stream, River and Canal Pipeline Crossings

Pipeline Name	Approximate Pipeline Station	Water Feature	Crossing Technique
Spanish Fork Canyon Pipeline	283+75	Creek	Jack/bore
Spanish Fork Canyon Pipeline	306+70	Creek	Jack/bore
Spanish Fork Canyon Pipeline	325+50	Creek	Jack/bore
Spanish Fork Canyon Pipeline	365+50	Creek	Jack/bore
Spanish Fork Canyon Pipeline	383+97	Creek	Jack/bore
Spanish Fork Canyon Pipeline	422+00	Mapleton Lateral Canal	
Spanish Fork – Santaquin Pipeline	98+00	Mill Race Canal	Jack/bore or Micro-tunnel
Spanish Fork – Santaquin Pipeline	100+00	Spanish Fork River	Jack/bore or Micro-tunnel
Spanish Fork – Santaquin Pipeline	103+00	South Field Canal	Jack/bore
Spanish Fork – Santaquin Pipeline	143+00	Salem Canal	Jack/bore
Spanish Fork – Santaquin Pipeline	242+00	Salem Canal	Jack/bore
Spanish Fork – Santaquin Pipeline	501+00	Strawberry Highline Canal	Jack/bore
Spanish Fork – Santaquin Pipeline	516+00	Strawberry Highline Canal	Jack/bore
Spanish Fork – Santaquin Pipeline	578+00	Irrigation Canal	open cut
Spanish Fork – Santaquin Pipeline	592+00	Irrigation Canal	open cut
Spanish Fork – Santaquin Pipeline	627+00	Irrigation Canal	open cut
Spanish Fork – Santaquin Pipeline	630+00	Strawberry Highline Canal	Jack/bore
Spanish Fork – Santaquin Pipeline	686+00	Irrigation Canal	open cut
Spanish Fork – Santaquin Pipeline	691+00	Spring Creek	Jack/bore
Spanish Fork – Santaquin Pipeline	800+00	Strawberry Highline Canal	Jack/bore
Spanish Fork – Santaquin Pipeline	880+00	drainage channel	open cut
Santaquin – Mona Reservoir Pipeline	344+00	Inlet to Mona Reservoir	Jack/bore
Spanish Fork – Provo Reservoir Canal/Pipeline	313+00	Hobble Creek	Jack/bore
Spanish Fork – Provo Reservoir Canal/Pipeline	357+00	Spring Creek	Jack/bore
Spanish Fork – Provo Reservoir Canal/Pipeline	678+00	Upper Union Canal	Open cut
Spanish Fork – Provo Reservoir	768+00	Rock Canyon	Open cut

Table 8-7 Stream, River and Canal Pipeline Crossings			
Pipeline Name	**Approximate Pipeline Station**	**Water Feature**	**Crossing Technique**
Canal/Pipeline			
Spanish Fork – Provo Reservoir Canal/Pipeline	941+00	Timpanogos Canal	Jack/bore
Spanish Fork – Provo Reservoir Canal/Pipeline	987+00	Provo River	Micro-tunnel
Spanish Fork – Provo Reservoir Canal/Pipeline	1003+00	Union Canal	Jack/bore
Spanish Fork – Provo Reservoir Canal/Pipeline	1010+00	Bench Canal	Jack/bore
Spanish Fork – Provo Reservoir Canal/Pipeline	1013+00	Provo Reservoir Canal	Jack/bore

TABLE VIII-24
Discharge and Drain Locations for ULS Pipeline Segments

Station	Drain Size (inch)	Disturbance area			Length of Road Cut (ft)	Discharge Feature			Discharge (cfs)	Remarks
		Width (ft)	Length (ft)	Area (sf)		Natural Drainage	Storm Drain	Pumped to Surface		
Santaquin-Mona										
63+00	4			0				x	0.5 to 2.0	Borrow area adjacent to RR
86+50	4			0				x	0.5 to 2.0	Borrow area adjacent to RR
197+50	4			0				x	0.5 to 2.0	Borrow area adjacent to RR
344+00	4			0				x	0.5 to 2.0	Borrow area adjacent to RR
419+10		50	60	3000					5 to 35	Weir discharge to Mona Reservoir

P:\MWH\Central Utah\dwg\Tech Memo 3-B\Sheets\Figures\Fig-3-B-4.dwg, 1/21/2004 3:22:36 PM

SCALE: N/A

MWH
MONTGOMERY WATSON HARZA

CUP

CENTRAL UTAH WATER CONSERVANCY DISTRICT

TYPICAL DETAIL

BLOW-OFF DRAIN

FIGURE III-B-4

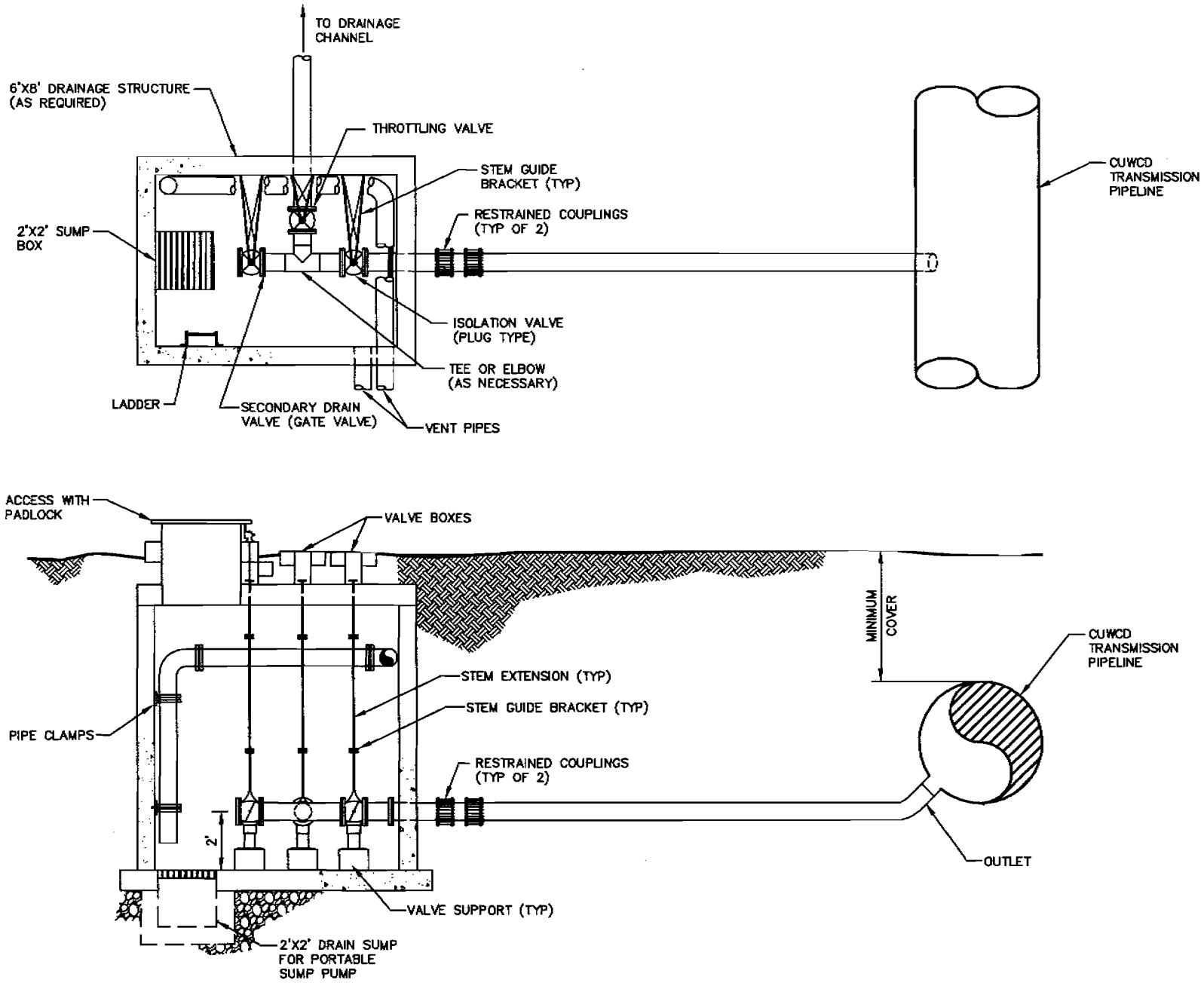

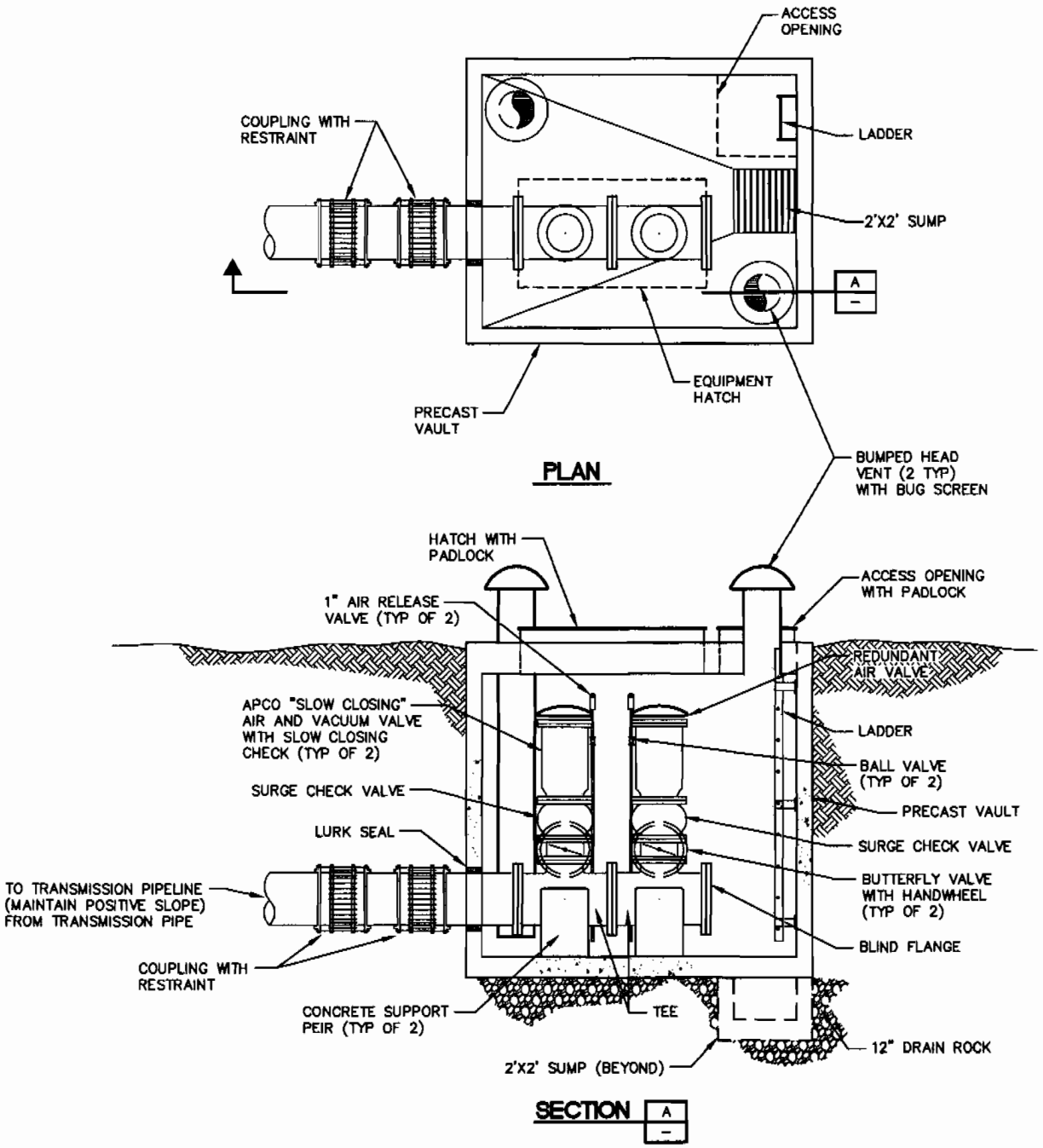

AIR VACUUM/AIR RELEASE VAULT

(6" TO 12" VALVES)

SCALE: N/A	MWH MONTGOMERY WATSON HARZA	CUP	CENTRAL UTAH WATER CONSERVANCY DISTRICT TYPICAL DETAIL AIR VACUUM/AIR RELEASE VAULT FIGURE III-B-5

P:\MWH\Central Data\dwg\Tech Memo 3-B\Sheets\Figures\Fig-3-B-5.dwg, 1/27/2004 9:41:15 PM

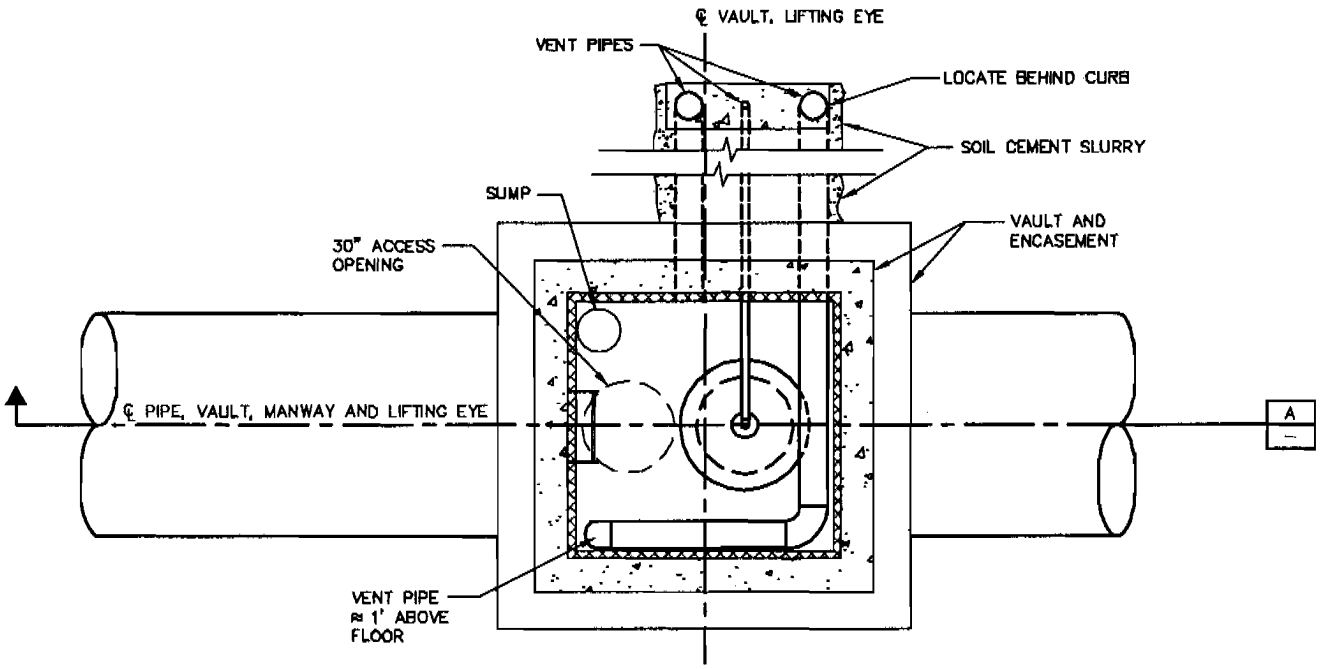

PLAN

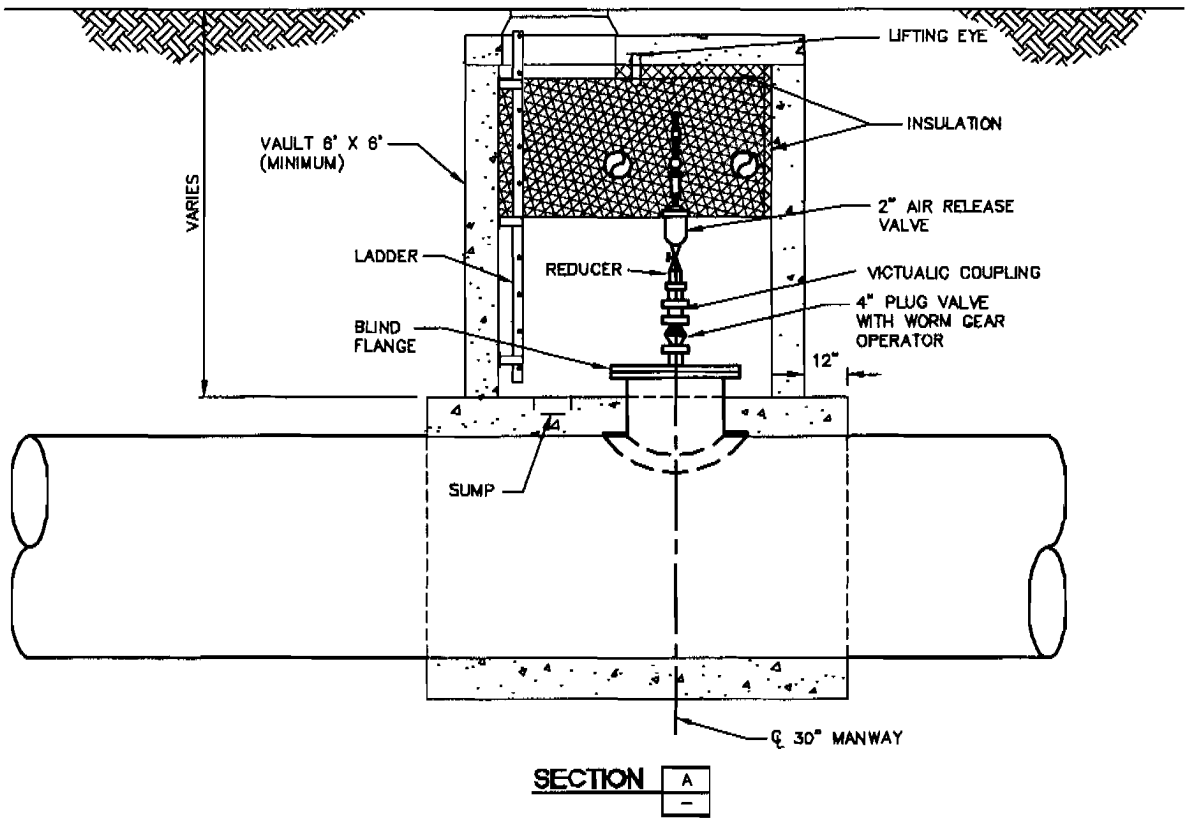

SECTION A

AIR RELEASE VAULT

SCALE:			
N/A	MWH MONTGOMERY WATSON HARZA	CUP	CENTRAL UTAH WATER CONSERVANCY DISTRICT TYPICAL DETAIL AIR RELEASE VAULT **FIGURE III-B-6**

P:\MWH\Central Utah\dwg\Figures\Fig-3-B-6.dwg, 11/20/2003 11:51:38 AM

P:\MWH\Ce... ...\dwg\Tech Memo 3-B\Sheets\Figures\Fig-3-B-12.dwg, 1/28/2004 10:37:03 AM

SCALE: N/A

MWH
MONTGOMERY WATSON HARZA

CUP
CENTRAL UTAH PROJECT COMPLETION ACT

CENTRAL UTAH WATER CONSERVANCY DISTRICT

SANTAQUIN – MONA RESERVOIR PIPELINE

MONA RESERVOIR DISCHARGE STRUCTURE

FIGURE II-B-12

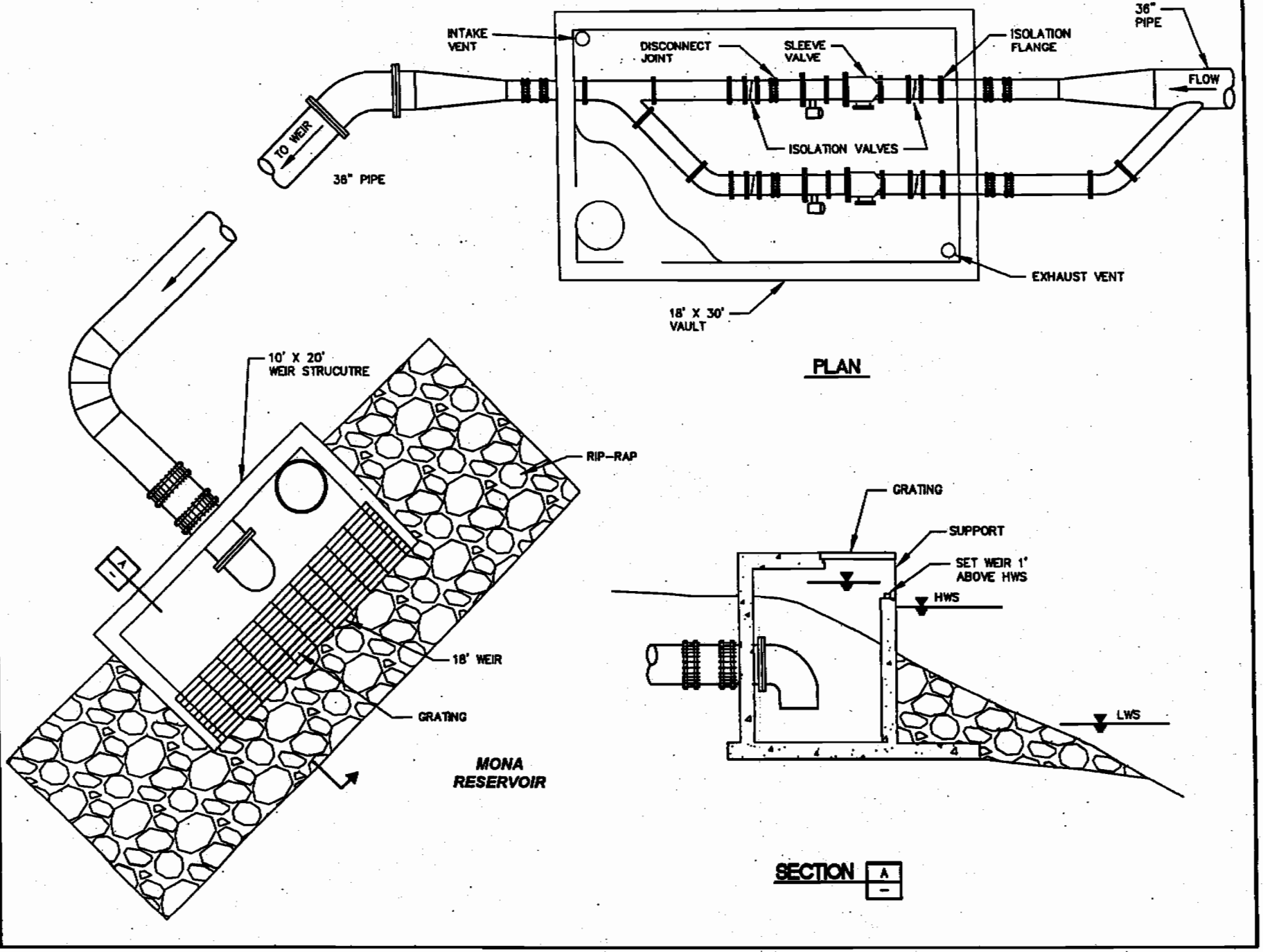

Central Utah Project Completion Program

Mapleton - Springville Lateral Pipeline

October 2004

UTAH RECLAMATION MITIGATION AND CONSERVATION COMMISSION

TABLE VIII-6
SUMMARY SHEET
FOR
MAPLETON-SPRINGVILLE LATERAL PIPELINE

	LABOR	MATERIAL	SUB AMOUNT	EQUIPMENT	OTHER	TOTAL	TOTAL w/Markups*
General Conditions	$894,160	$135,190	$7,140	$65,750	$80,000	$1,182,240	$1,796,186
Easement Costs	$0	$0	$0	$0	$207,900	$207,900	$315,864
Traffic Control	$58,320	$0	$0	$2,700	$0	$61,020	$92,708
Pipeline Costs	$3,429,469	$5,934,442	$0	$1,199,042	$0	$10,562,953	$16,048,370
Dewatering	$75,640	$32,550	$0	$0	$0	$108,190	$164,374
Erosion Control	$17,444	$317,680	$0	$0	$0	$335,124	$509,156
Utility work	$385,320	$251,330	$0	$103,590	$0	$740,240	$1,124,652
Road Restoration	$0	$0	$39,055	$0	$0	$39,055	$59,337
Landscaping	$21,120	$35,200	$0	$14,080	$0	$70,400	$106,959
Misc. Valves	$176,299	$1,215,396	$334,500	$43,880	$0	$1,770,075	$2,689,288
Cathodic Protection	$0	$0	$196,295	$0	$0	$196,295	$298,232
Jack & Bore	$0	$0	$0	$0	$0	$0	$0
Street Improvements	$0	$0	$0	$0	$0	$0	$0
Turnouts	$0	$0	$0	$0	$0	$0	$0
Mapleton PRV 10+07	$15,818	$260,281	$35,000	$40	$0	$311,139	$472,716
Mapleton PRV 260+00	$18,192	$288,886	$35,000	$640	$0	$342,718	$520,694
Canal Discharge Mod.	$20,487	$87,673	$0	$4,445	$0	$112,605	$171,082
Valve Vault	$12,840	$40,061	$35,000	$667	$0	$88,568	$134,562
Total	**$5,125,109**	**$8,598,689**	**$681,991**	**$1,434,833**	**$287,900**	**$16,128,521**	**$24,504,178**

* Mark-ups - see Preliminary Design Cost Estimate and Schedule for list of cost markups

Assumptions:

General Assumption - Assumed that pipeline is installed in existing canal from station 10+00 to 260+00 and installed parallel to existing canal from station 260+00 to end of Mapleton Canal.

General Conditions - Includes permits, testing and inspection, QA/QC plans, field office equipment and personnel, and mobilization/demobilization

Easement Costs - Include property acquisition costs, title search, appraisals, etc.

Traffic Control - Includes flaggers, traffic control plan, etc.

Pipeline Costs - Includes excavation, backfill/compaction,48/36/30-inch pipes, welded joints

Utility work - Includes relocation or temporary service for waterlines, gas lines, telephone. Also includes reconnection of water service, gas service, telephone service lines

Road Restoration - includes asphalt restoration 4-inch asphalt & 12-inch base course for City Roads

Miscellaneous Valves - Air Vacuum/Air Release Valve Structures, Air Release Structures, Drain Valves including drain lines to discharge locations.

Mapleton PRV 10+07 - Drops pressure from Spanish Fork Canyon pipeline to a minimal pressure head capable of reaching storage reservoir of irrigation company.

Mapleton PRV 260+00 - Drops pressure to discharge into existing Mapleton Lateral

Spreadsheet Level	Takeoff Quantity	Labor Cost/Unit	Labor Price	Labor Amount	Material Price	Material Amount	Sub Amount	Sub Name	Equip Price	Equip Amount	Other Price	Other Amount	Total Cost/Unit	Total Amount
12000 Mapleton Springville Lateral Pipeline Alt 2														
01 General Conditions				1,604,490		194,611	9,886			109,831		413,004		2,331,821
1000 Station 10+00 to 260+00				5,697,567		9,359,869	584,833			1,783,488				17,425,757
1100 Station 260+00 to 301+00				862,511		1,267,415	121,336			326,152				2,577,413
1200 Station 301+00 to 310+40				191,234		571,826	82,811			73,482				919,353
1300 Mapleton Pressure Reducing Vault, Station 10+07				26,013		374,685	48,459			64				449,220
1400 Mapleton Pressure Reducing Vault, Station 260+00				29,918		415,853	48,459			1,027				495,267
1500 Mapleton Lateral Canal Discharge, Station 310+40				33,692		126,208				7,132				167,031
1600 East Bench Canal Valve Vault, Station 310+41				21,116		57,669	48,459			1,079				128,314
12000 Mapleton Springville Lateral Pipeline Alt 2				***8,466,540***		***12,378,146***	***944,242***			***2,302,245***		***413,004***		***24,504,177***

Partial Totals

Labor	8,466,540		131,850.775	hrs
Material	12,378,146			
Subcontract	944,242			
Equipment	2,302,245		15,760.963	hrs
Other	413,004			
Project Total	24,504,177	24,504,177		
	Partial Total	***24,504,177***		

Spreadsheet Level	Takeoff Quantity	Labor Cost/Unit	Labor Price	Labor Amount	Material Price	Material Amount	Sub Amount	Sub Name	Equip Price	Equip Amount	Other Price	Other Amount	Total Cost/Unit	Total Amount
12000 Mapleton Springville Lateral Pipeline Alt 2														
01 General Conditions														
0060.000 Land Costs														
Permanent Easement Cost	1.00 ls	-	-	-	-	-	-		-	-	33,850.00 /ls	33,850	33,850.00 /ls	33,850
Temporary Easement Cost	1.00 ls	-	-	-	-	-	-		-	-	99,050.00 /ls	99,050	99,050.00 /ls	99,050
Easements, Appraisal/Negotiation	30.00 ea	-	-	-	-	-	-		-	-	2,500.00 /ea	75,000	2,500.00 /ea	75,000
Land Costs		*/ls*										*207,900*	*/ls*	*207,900*
1050.100 Permits														
Construction Permits	1.00 ls	-	-	-	/ls		-		-	-	50,000.00 /ls	50,000	50,000.00 /ls	50,000
Permits		*/ls*										*50,000*	*/ls*	*50,000*
1060.100 Documents														
QA/QC Plan	1.00 ls	11,250.00 /ls	11,250.00 /ls	11,250	2,500.00 /ls	2,500	-		-	-	-	-	13,750.00 /ls	13,750
Documents		*/ls*		*11,250*		*2,500*							*/ls*	*13,750*
1065.100 Start-Up & Commissioning														
Survey & Layouts	1.00 ls	42,000.00 /ls	42,000.00 /ls	42,000	5,000.00 /ls	5,000	-		12,000.00 /ls	12,000	-	-	59,000.00 /ls	59,000
Start-Up & Commissioning		*/ls*		*42,000*		*5,000*				*12,000*			*/ls*	*59,000*
1070.100 Photos														
Project Photos	12.00 mo	450.00 /mo	450.00 /mo	5,400	150.00 /mo	1,800	-		-	-	-	-	600.00 /mo	7,200
Photos		*/mo*		*5,400*		*1,800*							*/mo*	*7,200*
1075.100 Signs														
Project Signs 4x8	1.00 ea	150.00 /ea	150.00 /mh	150	250.00 /ea	250	-		-	-	-	-	400.00 /ea	400
Signs		*/ea*		*150*		*250*							*/ea*	*400*
1100.100 Project Management														
Construction Manager	16.00 wk	2,400.00 /wk	2,400.00 /wk	38,400	-	-	-		100.00 /wk	1,600	-	-	2,500.00 /wk	40,000
Project Engineer	52.00 wk	1,500.00 /wk	1,500.00 /wk	78,000	-	-	-		100.00 /wk	5,200	-	-	1,600.00 /wk	83,200
Purchasing Agent	5.00 wk	2,100.00 /wk	2,100.00 /wk	10,500	-	-	-		75.00 /wk	375	-	-	2,175.00 /wk	10,875
Senior Estimator	5.00 wk	1,500.00 /wk	1,500.00 /wk	7,500	-	-	-		75.00 /wk	375	-	-	1,575.00 /wk	7,875
Geotechnical Engineer	52.00 wk	1,600.00 /wk	1,600.00 /wk	83,200	-	-	-		75.00 /wk	3,900	-	-	1,675.00 /wk	87,100
Scheduling Engineer	52.00 wk	1,600.00 /wk	1,600.00 /wk	83,200	-	-	-		75.00 /wk	3,900	-	-	1,675.00 /wk	87,100
Project Management		*/wk*		*390,800*						*15,350*			*/wk*	*316,150*
1102.100 Site Supervision														
General Superintendent	52.00 wk	2,100.00 /wk	2,100.00 /wk	109,200	-	-	-		/wk		-	-	2,100.00 /wk	109,200
Civil Superintendent	52.00 wk	2,100.00 /wk	2,100.00 /wk	109,200	-	-	-		/wk		-	-	2,100.00 /wk	109,200
Assistant Superintendent	52.00 wk	1,500.00 /wk	1,500.00 /wk	78,000	-	-	-		/wk		-	-	1,500.00 /wk	78,000
Site Supervision		*/wk*		*296,400*									*/wk*	*296,400*
1106.100 Clerical Staff														
Project Secretary	52.00 wk	1,400.00 /wk	1,400.00 /wk	72,800	-	-	-		-	-	-	-	1,400.00 /wk	72,800
Time Keeper	52.00 wk	480.00 /wk	480.00 /wk	24,960	-	-	-		-	-	-	-	480.00 /wk	24,960
Clerical Staff		*/wk*		*97,760*									*/wk*	*97,760*
1110.100 Travel														
Weekly Auto Allowance	156.00 wk	-	-	-	75.00 /wk	11,700	-		-	-	-	-	75.00 /wk	11,700
Travel		*/wk*				*11,700*							*/wk*	*11,700*
1200.100 Security														
Watchman	52.00 wk	1,200.00 /wk	1,200.00 /wk	62,400	-	-	1,820		-	-	-	-	1,235.00 /wk	64,220
Conc Jersey Barriers	250.00 lf	-	-	-	8.00 /lf	2,000	-		-	-	-	-	8.00 /lf	2,000

Spreadsheet Level	Takeoff Quantity	Labor Cost/Unit	Labor Price	Labor Amount	Material Price	Material Amount	Sub Amount	Sub Name	Equip Price	Equip Amount	Other Price	Other Amount	Total Cost/Unit	Total Amount
Security		/ls		62,400		2,000	1,820						/ls	66,220
1250.100 Offices														
Office Trailer	12.00 mo	-	-	-	-	-	-		1,150.00 /mo	13,800	-	-	1,150.00 /mo	13,800
Offices		/ls								13,800			/ls	13,800
1255.100 Supplies & Equip														
Copy Machine	12.00 mo	-	-	-	550.00 /mo	6,600	-		-	-	-	-	550.00 /mo	6,600
Personal Computer	36.00 mo	-	-	-	200.00 /mo	7,200	-		-	-	-	-	200.00 /mo	7,200
Software Licenses	36.00 mo	-	-	-	75.00 /mo	2,700	-		-	-	-	-	75.00 /mo	2,700
Desks & Chairs	36.00 mo	-	-	-	5.00 /mo	180	-		-	-	-	-	5.00 /mo	180
File Cabinets	12.00 mo	-	-	-	5.00 /mo	60	-		-	-	-	-	5.00 /mo	60
Postage & Courier Services	12.00 mo	-	-	-	200.00 /mo	2,400	-		-	-	-	-	200.00 /mo	2,400
Fax Machine & Line	12.00 mo	-	-	-	150.00 /mo	1,800	-		-	-	-	-	150.00 /mo	1,800
Office Supplies & Equipment	12.00 mo	-	-	-	150.00 /mo	1,800	-		-	-	-	-	150.00 /mo	1,800
Supplies & Equip		/ls				22,740							/ls	22,740
1260.100 Utilities														
Electric Power	12.00 mo	-	-	-	700.00 /mo	8,400	-		-	-	-	-	700.00 /mo	8,400
Telephone Charges	12.00 mo	-	-	-	750.00 /mo	9,000	-		-	-	-	-	750.00 /mo	9,000
Temporary Toilets	12.00 mo	-	-	-	150.00 /mo	1,800	-		-	-	-	-	150.00 /mo	1,800
Utilities		/ls				19,200							/ls	19,200
1270.100 OSHA & Safety														
Safety Officer	52.00 wk	1,500.00 /wk	20.00 /mh	78,000	-	-	-		-	-	-	-	1,500.00 /wk	78,000
First Aid	1.00 ls		/ls		60,000.00 /ls	60,000	-		/ls		-	-	60,000.00 /ls	60,000
OSHA & Safety		/ls		78,000		60,000							/ls	138,000
1300.100 Allowances														
Office Furniture - Allowance	1.00 ls		/ls		10,000.00 /ls	10,000			-	-	-	-	10,000.00 /ls	10,000
Traffic Control, 3 each Flaggers for 18 wks	54.00 wk	1,080.00 /wk	1,080.00 /wk	58,320	/wk		-		50.00 /wk	2,700	-	-	1,130.00 /wk	61,020
Allowances		/ls		58,320		10,000				2,700			/ls	71,020
1460.100 Testing														
Misc Test & Inspection	12.00 mo	-	-	-	-	-			-	-	2,500.00 /mo	30,000	2,500.00 /mo	30,000
Testing		/ls										30,000	/ls	30,000
1630.100 Mobilization / Demobiliza														
Mobilization / Demobilization	28.00 ea		/ea		-	-	5,320		/ea		-	-	190.00 /ea	5,320
Mobilization / Demobiliza		/ls					5,320						/ls	5,320
2502.012 Trench Shoring														
Trench Box, 16' Deep, 2 each	24.00 mo	-	-	-	-	-	-		1,025.00 /mo	24,600	-	-	1,025.00 /mo	24,600
Trench Shoring		/mo								24,600			/mo	24,600
01 General Conditions				**952,480**		**135,190**	**7,140**			**58,450**		**287,900**		**1,451,160**
1000 Station 10+00 to 260+00														
2240.120 Dewatering														
Wellpoint Dewatering	2.00 mo	24,400.00 /mo	18.00 /mh	48,800	10,500.00 /mo	21,000	-		/mo		-	-	34,900.00 /mo	69,800
Dewatering		/mo		48,800		21,000							/mo	69,800
2316.202 Pipe Excavation														
Excavate Silt-Clay, Loam, Hydraulic Hoe	85,200.00 cy	0.94 /cy	140.08 /cd	80,088	-	-	-		1.60 /cy	136,320	-	-	2.54 /cy	216,408

Spreadsheet Level	Takeoff Quantity	Labor Cost/Unit	Labor Price	Labor Amount	Material Price	Material Amount	Sub Amount	Sub Name	Equip Price	Equip Amount	Other Price	Other Amount	Total Cost/Unit	Total Amount
2316.202 Pipe Excavation														
Backfill and Compact, Machine	73,550.00 cy	1.53 /cy	140.08 /cd	112,531	-	-	-		0.89 /cy	65,460	-	-	2.42 /cy	177,991
Backfill and Compact, Machine, Clay Canal Lining	25,930.00 cy	1.53 /cy	140.08 /cd	39,673	-	-	-		0.89 /cy	23,078	-	-	2.42 /cy	62,751
Excess Material, 5 Mile Haul, Offsite	33,325.00 cy	2.86 /cy	140.08 /cd	95,309	-	-	-		7.01 /cy	233,608	-	-	9.87 /cy	328,918
Clay Canal Lining Material, 5 Mile Haul	25,930.00 cy	2.86 /cy	140.08 /cd	74,160	16.00 /cy	414,880	-		7.01 /cy	181,769	-	-	25.87 /cy	670,809
Pipe Excavation		*/cy*		*401,761*		*414,880*				*640,235*			*/cy*	*1,456,876*
2370.150 Temp Erosion Control														
Erosion Control Mats-Slopes	100,000.00 sf	0.12 /sf	12.08 /ch	12,080	2.00 /sf	220,000	-		-	-	-	-	2.32 /sf	232,080
Temp Erosion Control		*/sf*		*12,080*		*220,000*							*/sf*	*232,080*
2502.014 Pipe Bedding														
Utility Bed Grave -Crushed	21,700.00 cy	2.86 /cy	96.64 /cd	62,062	10.00 /cy	238,700	-		1.74 /cy	37,758	-	-	15.60 /cy	338,520
Pipe Bedding		*/cy*		*62,062*		*238,700*				*37,758*			*/cy*	*338,520*
2580.500 Utility Conflicts														
Utility Conflicts	8.00 ea	21,125.00 /ea	25.00 /mh	169,000	13,685.00 /ea	109,480	-		5,680.00 /ea	45,440	-	-	40,490.00 /ea	323,920
Utility Conflicts		*/ea*		*169,000*		*109,480*				*45,440*			*/ea*	*323,920*
2630.006 Catch Basin 6'														
6" Blow-Off Drainage System, 180+00	1.00 ea		/ch		/ea		***17,500***		/ch		-	-	17,500.00 /ea	17,500
Catch Basin 6'		*/ea*					*17,500*						*/ea*	*17,500*
2740.120 Asphalt Paving - SY														
Compacted Base 12", 8 road crossings	1,100.00 sy	-	-	-	-	-	23,023		-	-	-	-	20.93 /sy	23,023
Bituminous Top Course 4", 8 road crossings	1,100.00 sy	-	-	-	-	-	8,800		-	-	-	-	8.00 /sy	8,800
Asphalt Paving - SY		*/sy*					*31,823*						*/sy*	*31,823*
2950.000 SITE RESTORATION														
Restore Landscaping	593.00 msf	30.00 /msf	30.00 /msf	17,790	50.00 /msf	29,650	-		20.00 /msf	11,860	-	-	100.00 /msf	59,300
SITE RESTORATION		*/msf*		*17,790*		*29,650*				*11,860*			*/msf*	*59,300*
15230.301 XH Pipe PE														
48" Steel Pipe, 150 psi, Mortar Lined & Coated	25,000.00 lf	24.50 /lf	16.78 /mh	612,499	179.00 /lf	4,475,000	-		12.00 /lf	300,000	-	-	215.50 /lf	5,387,499
Welding per Joint - 48"	548.00 ea	3,612.00 /ea	3,612.00 /ea	1,979,376	100.00 /ea	54,800	-		75.00 /ea	41,100	-	-	3,787.00 /ea	2,075,276
XH Pipe PE		*/lf*		*2,591,875*		*4,529,800*				*341,100*			*/lf*	*7,462,775*
15230.314 Pipe Fittings														
48" Pipe Fittings	25.00 ea	1,050.00 /ea	16.78 /mh	26,250	5,200.00 /ea	130,000	-		175.00 /ea	4,375	-	-	6,425.00 /ea	160,625
Pipe Fittings		*/ea*		*26,250*		*130,000*				*4,375*			*/ea*	*160,625*
15230.340 Turn Outs, Drains, Air Re														
18" Turn Out, 7 cfs, Station 72+87 to 259+80	9.00 ea	6,721.00 /ea	16.78 /mh	60,489	68,914.00 /ea	620,226	211,500		1,958.00 /ea	17,622	-	-	101,093.00 /ea	909,837
Air Vacuum/Air Release Vault, 10"	3.00 ea	5,078.00 /ea	5,078.00 /ea	15,234	25,672.00 /ea	77,016	-		757.00 /ea	2,271	-	-	31,507.00 /ea	94,521
Air Release Vault, 2"	14.00 ea	2,937.00 /ea	2,937.00 /ea	41,118	6,298.00 /ea	88,172	-		479.00 /ea	6,706	-	-	9,714.00 /ea	135,996

Spreadsheet Level	Takeoff Quantity	Labor Cost/Unit	Labor Price	Labor Amount	Material Price	Material Amount	Sub Amount	Sub Name	Equip Price	Equip Amount	Other Price	Other Amount	Total Cost/Unit	Total Amount
15230.340 Turn Outs, Drains, Air Re														
Drain Vault, 6"	2.00 ea	9,039.00 /ea	9,039.00 /ea	18,078	15,007.00 /ea	30,014	-		2,080.00 /ea	4,160	-	-	26,126.00 /ea	52,252
Turn Outs, Drains, Air Re		*/ea*		*134,919*		*815,428*	*211,500*			*30,759*			*/ea*	*1,192,606*
16151.110 Cathodic Protection														
Cathodic Protection, Impressed Current	25,000.00 lf		/mh		/lf		25,000		-	-	-	-	1.00 /lf	25,000
Joint Seal	548.00 ea		/mh		/ea		68,500		-	-	-	-	125.00 /ea	68,500
Joint Bond	548.00 ea		/mh		/ea		32,880		-	-	-	-	60.00 /ea	32,880
Test Station at 1000 LF	25.00 ea		/mh		/ea		10,000		-	-	-	-	400.00 /ea	10,000
Insulating Flange Kits	9.00 ea		/mh		/ea		7,200		-	-	-	-	800.00 /ea	7,200
PCR Kits	9.00 ea		/mh		/ea		18,000		-	-	-	-	2,000.00 /ea	18,000
Cathodic Protection		*/lf*					*161,580*						*/lf*	*161,580*
1900 Station 10+00 to 260+00				**3,464,538**		**6,508,938**	**422,403**			**1,111,527**				**11,507,406**
1100 Station 260+00 to 301+00														
2240.120 Dewatering														
Wellpoint Dewatering	0.80 mo	24,400.00 /mo	16.00 /mh	19,520	10,500.00 /mo	8,400	-		/mo		-	-	34,900.00 /mo	27,920
Dewatering		*/mo*		*19,520*		*8,400*							*/mo*	*27,920*
2316.202 Pipe Excavation														
Excavate Silt-Clay, Loam, Hydraulic Hoe	11,694.00 cy	0.94 /cy	140.08 /cd	10,992	-	-	-		1.60 /cy	18,710	-	-	2.54 /cy	29,703
Backfill and Compact, Machine	10,619.00 cy	1.53 /cy	140.08 /cd	16,247	-	-	-		0.89 /cy	9,451	-	-	2.42 /cy	25,698
Backfill and Compact, Machine, Clay Canal Lining	4,260.00 cy	1.53 /cy	140.08 /cd	6,518	-	-	-		0.89 /cy	3,791	-	-	2.42 /cy	10,309
Excess Material, 5 Mile Haul, Offsite	3,797.00 cy	2.86 /cy	140.08 /cd	10,859	-	-	-		7.01 /cy	26,617	-	-	9.87 /cy	37,476
Clay Canal Lining Material, 5 Mile Haul	4,260.00 cy	2.86 /cy	140.08 /cd	12,184	16.00 /cy	68,160	-		7.01 /cy	29,863	-	-	25.87 /cy	110,206
Pipe Excavation		*/cy*		*56,800*		*68,160*				*99,432*			*/cy*	*213,392*
2370.150 Temp Erosion Control														
Erosion Control Mats-Slopes	36,100.00 sf	0.12 /sf	12.08 /ch	4,361	2.00 /sf	79,420	-		-	-	-	-	2.32 /sf	83,781
Temp Erosion Control		*/sf*		*4,361*		*79,420*							*/sf*	*83,781*
2502.014 Pipe Bedding														
Utility Bed Gravel-Crushed	2,723.00 cy	2.86 /cy	96.64 /cd	7,788	10.00 /cy	29,953	-		1.74 /cy	4,738	-	-	15.60 /cy	42,479
Pipe Bedding		*/cy*		*7,788*		*29,953*				*4,738*			*/cy*	*42,479*
2580.500 Utility Conflicts														
Utility Conflicts	8.00 ea	21,125.00 /ea	25.00 /mh	169,000	13,685.00 /ea	109,480	-		5,680.00 /ea	45,440	-	-	40,490.00 /ea	323,920
Replace Utility Connection, Water, Sewer, Telephone, Gas, Electric	10.00 ea	507.00 /ea	507.00 /ea	5,070	500.00 /ea	5,000	-		135.00 /ea	1,350	-	-	1,142.00 /ea	11,420
Utility Conflicts		*/ea*		*174,070*		*114,480*				*46,790*			*/ea*	*335,340*
2630.006 Catch Basin 6'														
6" Blow-Off Drainage System, 247+00	1.00 ea		/ch		/ea		***17,500***		/ch		-	-	17,500.00 /ea	17,500
6" Blow-Off Drainage System, 284+00	1.00 ea		/ch		/ea		***17,500***		/ch		-	-	17,500.00 /ea	17,500

Spreadsheet Level	Takeoff Quantity	Labor Cost/Unit	Labor Price	Labor Amount	Material Price	Material Amount	Sub Amount	Sub Name	Equip Price	Equip Amount	Other Price	Other Amount	Total Cost/Unit	Total Amount
Catch Basin 6'		*/ea*					*35,000*						*/ea*	*35,000*
2740.120 Asphalt Paving - SY														
Compacted Base 12", Road Crossing	125.00 sy	-	-	-	-	-	2,616		-	-	-	-	20.93 /sy	2,616
Bitum nous Top Course 4", Road Crossing	125.00 sy	-	-	-	-	-	1,000		-	-	-	-	8.00 /sy	1,000
Asphalt Paving - SY		*/sy*					*3,616*						*/sy*	*3,616*
2950.000 SITE RESTORATION														
Restore Landscaping	90.00 msf	30.00 /msf	30.00 /msf	2,700	50.00 /msf	4,500	-		20.00 /msf	1,800	-	-	100.00 /msf	9,000
SITE RESTORATION		*/msf*		*2,700*		*4,500*				*1,800*			*/msf*	*9,000*
15230.301 XH Pipe PE														
36" Steel Pipe, 150 psi, Mortar Lined & Coated	4,100.00 lf	24.50 /lf	16.78 /mh	100,450	108.00 /lf	442,800	-		12.00 /lf	49,200	-	-	144.50 /lf	592,450
Welding per Joint - 36"	92.00 ea	1,475.00 /ea	1,475.00 /ea	135,700	75.00 /ea	6,900	-		65.00 /ea	5,980	-	-	1,615.00 /ea	148,580
XH Pipe PE		*/lf*		*236,150*		*449,700*				*55,180*			*/lf*	*741,030*
15230.314 Pipe Fittings														
36" Pipe Fittings	4.00 ea	1,050.00 /ea	16.78 /mh	4,200	2,430.00 /ea	9,720	-		175.00 /ea	700	-	-	3,655.00 /ea	14,620
Pipe Fittings		*/ea*		*4,200*		*9,720*				*700*			*/ea*	*14,620*
15230.340 Turn Outs, Drains, Air Re														
Drain Vault, 6"	1.00 ea	9,039.00 /ea	9,039.00 /ea	9,039	15,007.00 /ea	15,007	-		2,080.00 /ea	2,080	-	-	26,126.00 /ea	26,126
Air Release Vault, 2"	1.00 ea	2,937.00 /ea	2,937.00 /ea	2,937	6,298.00 /ea	6,298	-		479.00 /ea	479	-	-	9,714.00 /ea	9,714
24" Turn Out, 14 cfs, Station 284+16	1.00 ea	6,905.00 /ea	6,905.00 /ea	6,905	94,793.00 /ea	94,793	23,500		3,069.00 /ea	3,069	-	-	128,267.00 /ea	128,267
Turn Outs, Drains, Air Re		*/ea*		*18,881*		*116,098*	*23,500*			*5,628*			*/ea*	*164,107*
16151.110 Cathodic Protection														
Cathodic Protection, Impressed Current	4,100.00 lf		/mh		/lf		4,100		-	-	-	-	1.00 /lf	4,100
Joint Seal	92.00 ea		/mh		/ea		11,500		-	-	-	-	125.00 /ea	11,500
Joint Bond	92.00 ea		/mh		/ea		5,520		-	-	-	-	60.00 /ea	5,520
Test Station at 1000 LF	4.00 ea		/mh		/ea		1,600		-	-	-	-	400.00 /ea	1,600
Insulating Flange Kits	1.00 ea		/mh		/ea		800		-	-	-	-	800.00 /ea	800
PCR Kits	1.00 ea		/mh		/ea		2,000		-	-	-	-	2,000.00 /ea	2,000
Cathodic Protection		*/lf*					*25,520*						*/lf*	*25,520*
1100 Station 250+00 to 301+00				**524,470**		**880,431**	**87,636**			**203,268**				**1,695,805**
1200 Station 301+00 to 310+40														
2221.105 Core Drill Concrete														
Core Drill 30" to 12" depth	1.00 ea	66.44 /ea	12.08 /mh	66	-	-	-		/ea		-	-	66.44 /ea	66
Core Drill Concrete		*/ea*		*66*									*/ea*	*66*
2222.015 Demo DI Pipe														
Demo Existing 27" Pipe	20.00 lf	2.73 /lf	13.65 /mh	55	-	-	-		-	-	-	-	2.73 /lf	55
Demo DI Pipe		*/lf*		*55*									*/lf*	*55*
2240.120 Dewatering														
Wellpoint Dewatering	0.30 mo	24,400.00 /mo	18.00 /mh	7,320	10,500.00 /mo	3,150	-		/mo		-	-	34,900.00 /mo	10,470
Dewatering		*/mo*		*7,320*		*3,150*							*/mo*	*10,470*
2316.202 Pipe Excavation														
Excavate Silt-Clay, Loam, Hydraulic Hoe	2,446.00 cy	0.94 /cy	140.08 /cd	2,299	-	-	-		1.60 /cy	3,914	-	-	2.54 /cy	6,213

Spreadsheet Level	Takeoff Quantity	Labor Cost/Unit	Labor Price	Labor Amount	Material Price	Material Amount	Sub Amount	Sub Name	Equip Price	Equip Amount	Other Price	Other Amount	Total Cost/Unit	Total Amount
2316.202 Pipe Excavation														
Backfill and Compact, Machine	2,275.00 cy	1.53 /cy	140.08 /cd	3,481	-	-	-		0.89 /cy	2,025	-	-	2.42 /cy	5,506
Backfill and Compact, Machine, Clay Canal Lining	975.00 cy	1.53 /cy	140.08 /cd	1,492	-	-	-		0.89 /cy	868	-	-	2.42 /cy	2,360
Excess Material, 5 Mile Haul, Offsite	705.00 cy	2.86 /cy	140.08 /cd	2,016	-	-	-		7.01 /cy	4,942	-	-	9.87 /cy	6,958
Clay Canal Lining Material, 5 Mile Haul	975.00 cy	2.86 /cy	140.08 /cd	2,789	16.00 /cy	15,600	-		7.01 /cy	6,835	-	-	25.87 /cy	25,223
Pipe Excavation		*/cy*		*12,077*		*15,600*				*18,583*			*/cy*	*46,259*
2370.150 Temp Erosion Control														
Erosion Control Mats-Slopes	8,300.00 sf	0.12 /sf	12.08 /ch	1,003	2.00 /sf	18,260	-		-	-	-	-	2.32 /sf	19,263
Temp Erosion Control		*/sf*		*1,003*		*18,260*							*/sf*	*19,263*
2502.014 Pipe Bedding														
Utility Bed Gravel-Crushed	834.00 cy	2.86 /cy	96.64 /cd	2,385	10.00 /cy	9,174	-		1.74 /cy	1,451	-	-	15.60 /cy	13,010
Pipe Bedding		*/cy*		*2,385*		*9,174*				*1,451*			*/cy*	*13,010*
2502.020 Concrete Thrust Blocks														
Concrete Encasement, 3500 psi	4.00 cy	-	-	-	66.00 /cy	277	-		-	-	-	-	69.30 /cy	277
Concrete Thrust Blocks		*/cy*				*277*							*/cy*	*277*
2580.500 Utility Conflicts														
Utility Conflicts	2.00 ea	21,125.00 /ea	25.00 /mh	42,250	13,685.00 /ea	27,370	-		5,680.00 /ea	11,360	-	-	40,490.00 /ea	80,980
Utility Conflicts		*/ea*		*42,250*		*27,370*				*11,360*			*/ea*	*80,980*
2740.120 Asphalt Paving - SY														
Compacted Base 12", Road Crossing	125.00 sy	-	-	-	-	-	2,616		-	-	-	-	20.93 /sy	2,616
Bituminous Top Course 4", Road Crossing	125.00 sy	-	-	-	-	-	1,000		-	-	-	-	8.00 /sy	1,000
Asphalt Paving - SY		*/sy*					*3,616*						*/sy*	*3,616*
2950.000 SITE RESTORATION														
Restore Landscaping	21.00 msf	30.00 /msf	30.00 /msf	630	50.00 /msf	1,050	-		20.00 /msf	420	-	-	100.00 /msf	2,100
SITE RESTORATION		*/msf*		*630*		*1,050*				*420*			*/msf*	*2,100*
15120.002 Bolt - Nut & Gasket Sets														
Seal, Core Drill	1.00 ea	100.00 /ea	100.00 /ea	100	220.00 /ea	220	-		-	-	-	-	320.00 /ea	320
Bolt - Nut & Gasket Sets		*/ea*		*100*		*220*							*/ea*	*320*
15230.301 XH Pipe PE														
30" Steel Pipe, 150 psi, Mortar Lined & Coated	420.00 lf	24.50 /lf	16.78 /mh	10,290	72.00 /lf	30,240	-		12.00 /lf	5,040	-	-	108.50 /lf	45,570
Welding per Joint - 30"	15.00 ea	894.00 /ea	894.00 /ea	13,410	62.50 /ea	938	-		50.00 /ea	750	-	-	1,006.50 /ea	15,098
XH Pipe PE		*/lf*		*23,700*		*31,178*				*5,790*			*/lf*	*60,667*
15230.314 Pipe Fittings														
30" Pipe Fittings	4.00 ea	1,050.00 /ea	16.78 /mh	4,200	1,770.00 /ea	7,080	-		175.00 /ea	700	-	-	2,995.00 /ea	11,980
Pipe Fittings		*/ea*		*4,200*		*7,080*				*700*			*/ea*	*11,980*

15230.340 Turn Outs, Drains, Air Re

Spreadsheet Level	Takeoff Quantity	Labor Cost/Unit	Labor Price	Labor Amount	Material Price	Material Amount	Sub Amount	Sub Name	Equip Price	Equip Amount	Other Price	Other Amount	Total Cost/Unit	Total Amount
15230.340 Turn Outs, Drains, Air Re														
24" Turn Out, 14 cfs, Station 301+06	1.00 ea	6,905.00 /ea	6,905.00 /ea	6,905	94,793.00 /ea	94,793	23,500		3,069.00 /ea	3,069	-	-	128,267.00 /ea	128,267
Air Vacuum/Air Release Vault, 10"	1.00 ea	5,078.00 /ea	5,078.00 /ea	5,078	25,672.00 /ea	25,672	-		757.00 /ea	757	-	-	31,507.00 /ea	31,507
36" Turn Out, 36 cfs, Tee Only Station 305+20	1.00 ea	7,579.00 /ea	7,579.00 /ea	7,579	157,107.00 /ea	157,107	23,500		3,187.00 /ea	3,187	-	-	191,373.00 /ea	191,373
Air Release Vault, 2"	1.00 ea	2,937.00 /ea	2,937.00 /ea	2,937	6,298.00 /ea	6,298	-		479.00 /ea	479	-	-	9,714.00 /ea	9,714
Turn Outs, Drains, Air Re		*/ea*		*22,499*		*283,870*	*47,000*			*7,492*			*/ea*	*360,861*
16151.110 Cathodic Protection														
Cathodic Protection, Impressed Current	420.00 lf		/mh		/lf		420		-	-	-	-	1.00 /lf	420
Joint Seal	15.00 ea		/mh		/ea		1,875		-	-	-	-	125.00 /ea	1,875
Joint Bond	15.00 ea		/mh		/ea		900		-	-	-	-	60.00 /ea	900
Test Station at 1000 LF	1.00 ea		/mh		/ea		400		-	-	-	-	400.00 /ea	400
Insulating Flange Kits	2.00 ea		/mh		/ea		1,600		-	-	-	-	800.00 /ea	1,600
PCR Kits	2.00 ea		/mh		/ea		4,000		-	-	-	-	2,000.00 /ea	4,000
Cathodic Protection		*/lf*					*9,195*						*/lf*	*9,195*
1200 Station 301+06 to 316+40				**115,284**		**397,229**	**59,811**			**45,796**				**619,120**
1300 Mapleton Pressure Reducing Vault, Station 10+07														
2519.310 Dresser Couplings														
Dresser Couplings 30"	4.00 ea	22.82 /ea	45.64 /ch	91	3,000.00 /ea	12,000	-		/ch		-	-	3,022.82 /ea	12,091
Dresser Couplings 24"	2.00 ea	22.82 /ea	45.64 /ch	46	2,400.00 /ea	4,800	-		/ch		-	-	2,422.82 /ea	4,846
Dresser Couplings		*/ea*		*137*		*16,800*							*/ea*	*16,937*
2531.004 Manholes 4'														
Manhole 4' Flat Cover	1.00 ea	45.69 /ea	45.69 /ch	46	90.00 /ea	90	-		40.00 /ch	40	-	-	175.69 /ea	176
Manholes 4'		*/ea*		*46*		*90*				*40*			*/ea*	*176*
3100.120 Forms- S-O-G														
S.O.G. Edge Form < 1'	96.00 sf	1.41 /sf	15.68 /mh	135	0.75 /sf	76	-		-	-	-	-	2.20 /sf	211
Forms- S-O-G		*/sf*		*135*		*76*							*/sf*	*211*
3100.124 Forms- Suspended Slab														
Form Suspended Slab 0-15'	540.00 sf	1.41 /sf	15.68 /mh	762	1.00 /sf	567	-		-	-	-	-	2.46 /sf	1,329
Floor Opening Forms	32.00 lf	1.41 /lf	15.68 /mh	45	0.50 /lf	17	-		-	-	-	-	1.94 /lf	62
Slab Edge Form < 1'	96.00 sf	1.08 /sf	15.68 /mh	104	2.00 /sf	202	-		-	-	-	-	3.18 /sf	305
Forms- Suspended Slab		*/sf*		*911*		*785*							*/sf*	*1,696*
3100.180 Forms- Wall Forms														
Rented Form System 12-16'	2,688.00 sf	2.34 /sf	15.68 /mh	6,279	1.25 /sf	3,528	-		-	-	-	-	3.65 /sf	9,807
Forms- Wall Forms		*/sf*		*6,279*		*3,528*							*/sf*	*9,807*
3100.310 Forms- Strip & Oil														
Strip & Oil Suspended Slab Frm.	540.00 sf	0.06 /sf	12.08 /mh	33	-	-	-		-	-	-	-	0.06 /sf	33
Strip & Oil Wall Forms	2,688.00 sf	0.06 /sf	12.08 /mh	162	-	-	-		-	-	-	-	0.06 /sf	162
Strip & Oil SOG Form	96.00 sf	0.06 /sf	12.08 /mh	6	-	-	-		-	-	-	-	0.06 /sf	6
Forms- Strip & Oil		*/sf*		*201*									*/sf*	*201*
3150.192 Forms- Wall Access														
Wall Bulkhead Forms	112.00 sf	4.70 /sf	15.68 /mh	527	1.00 /sf	118	-		-	-	-	-	5.75 /sf	644

Spreadsheet Level	Takeoff Quantity	Labor Cost/Unit	Labor Price	Labor Amount	Material Price	Material Amount	Sub Amount	Sub Name	Equip Price	Equip Amount	Other Price	Other Amount	Total Cost/Unit	Total Amount
Forms- Wall Access		*/ls*		*527*		*116*							*/ls*	*644*
3150.198 Forms- Wall Inserts														
Pour Strips	636.00 lf	0.78 /lf	15.68 /mh	499	0.18 /lf	120	-		-	-	-	-	0.97 /lf	619
Forms- Wall Inserts		*/ls*		*499*		*120*							*/ls*	*619*
3210.104 Rebar- by Lbs/CY														
SOG Rebar	0.50 tn	170.60 /tn	17.06 /mh	85	560.00 /tn	294	-		-	-	-	-	758.60 /tn	379
Wall Rebar	1.25 tn	170.60 /tn	17.06 /mh	212	560.00 /tn	732	-		-	-	-	-	758.49 /tn	944
Suspended Slab Rebar	1.00 tn	170.60 /tn	17.06 /mh	171	560.00 /tn	588	-		-	-	-	-	758.60 /tn	759
Rebar- by Lbs/CY		*/ton*		*468*		*1,614*							*/ton*	*2,082*
3220.110 Wire Mesh- Rolls														
Mesh Support - bricks	77.00 ea	0.03 /ea	17.06 /mh	3	0.18 /ea	15	-		-	-	-	-	0.22 /ea	17
Wire Mesh- Rolls		*/sf*		*3*		*15*							*/sf*	*17*
3310.100 Concrete- Buy														
3500 psi Concrete	20.00 cy	-	-	-	71.00 /cy	1,491	-		-	-	-	-	74.55 /cy	1,491
3500 psi Concrete	49.78 cy	-	-	-	71.00 /cy	3,711	-		-	-	-	-	74.55 /cy	3,711
3500 psi Concrete	20.00 cy	-	-	-	71.00 /cy	1,491	-		-	-	-	-	74.55 /cy	1,491
Concrete- Buy		*/cy*				*6,693*							*/cy*	*6,693*
3310.230 Place- S-O-G														
Pump Place Slab on Grade	20.00 cy	7.38 /cy	14.75 /mh	148	-	-	-		-	-	-	-	7.38 /cy	148
Place- S-O-G		*/cy*		*148*									*/cy*	*148*
3310.240 Place- Suspended Slab														
Crane Place Suspended Slab	20.00 cy	10.31 /cy	14.75 /mh	206	-	-	-		-	-	-	-	10.31 /cy	206
Place- Suspended Slab		*/cy*		*206*									*/cy*	*206*
3310.260 Place- Walls														
Pump Place Walls	49.78 cy	10.31 /cy	14.75 /mh	513	-	-	-		-	-	-	-	10.31 /cy	513
Place- Walls		*/cy*		*513*									*/cy*	*513*
3350.110 Finish Flatwork														
Finish- Hard Trowel	540.00 sf	0.21 /sf	14.18 /mh	114	0.03 /sf	16	-		-	-	-	-	0.24 /sf	130
Finish- Hard Trowel	540.00 sf	0.21 /sf	14.18 /mh	114	0.03 /sf	16	-		-	-	-	-	0.24 /sf	130
Finish- Top of Wall & Curb	96.00 sf	0.11 /sf	14.18 /mh	11	-	-	-		-	-	-	-	0.11 /sf	11
Finish Flatwork		*/sf*		*239*		*32*							*/sf*	*271*
3350.130 Patch & Grind														
Grind/Patch Walls	2,688.00 sf	0.18 /sf	12.08 /mh	484	0.01 /sf	27	-		-	-	-	-	0.19 /sf	511
Patch & Grind		*/sf*		*484*		*27*							*/sf*	*511*
3390.170 Curing														
Liquid Curing Compounds	540.00 sf	0.02 /sf	12.08 /mh	13	0.01 /sf	6	-		-	-	-	-	0.04 /sf	19
Liquid Curing Compounds	2,688.00 sf	0.02 /sf	12.08 /mh	65	0.01 /sf	28	-		-	-	-	-	0.04 /sf	93
Liquid Curing Compounds	540.00 sf	0.02 /sf	12.08 /mh	13	0.01 /sf	6	-		-	-	-	-	0.04 /sf	19
Curing		*/sf*		*91*		*40*							*/sf*	*131*
3390.180 Hardener														

Spreadsheet Level	Takeoff Quantity	Labor Cost/Unit	Labor Price	Labor Amount	Material Price	Material Amount	Sub Amount	Sub Name	Equip Price	Equip Amount	Other Price	Other Amount	Total Cost/Unit	Total Amount
3390.160 Hardener														
Seal Floors	540.00 sf	0.02 /sf	12.08 /mh	13	0.05 /sf	28	-		-	-	-	-	0.08 /sf	41
Hardener		*/sf*		*13*		*28*							*/sf*	*41*
5510.100 Stairs & Ladders														
Pit Ladder	1.00 ea	20.82 /ea	41.64 /mh	21	75.00 /ea	75	-		-	-	-	-	95.82 /ea	96
Stairs & Ladders		*/ls*		*21*		*75*							*/ls*	*96*
11295.010 Valves- Butterfly Flange														
Flge Btfly Valve/Elect Oper 24"	4.00 ea	132.55 /ea	13.26 /mh	530	7,000.00 /ea	28,000	-		-	-	-	-	7,132.55 /ea	28,530
Valves- Butterfly Flange		*/ea*		*530*		*28,000*							*/ea*	*28,530*
11295.020 Valves- Regulating														
24" Sleeve Valve	2.00 ea	106.04 /ea	13.26 /mh	212	64,800.00 /ea	129,600	-		-	-	-	-	64,906.04 /ea	129,812
Valves- Regulating		*/ls*		*212*		*129,600*							*/ls*	*129,812*
15060.200 Pipe Support														
Pipe Support	6.00 ea	22.00 /ea	22.00 /ea	132	109.41 /ea	656	-		-	-	-	-	131.41 /ea	788
Pipe Support		*/ea*		*132*		*656*							*/ea*	*788*
15120.002 Bolt - Nut & Gasket Sets														
Seal, Pipe Inlet	3.00 ea	100.00 /ea	100.00 /ea	300	220.00 /ea	660	-		-	-	-	-	320.00 /ea	960
Bolt - Nut & Gasket Sets		*/ea*		*300*		*660*							*/ea*	*960*
15120.020 Exp Joint Flange SS														
24" Flow Meter	2.00 ea	250.00 /ea	250.00 /ea	500	12,700.00 /ea	25,400	-		/ea		-	-	12,950.00 /ea	25,900
Exp Joint Flange SS		*/ea*		*500*		*25,400*							*/ea*	*25,900*
15230.201 Std Wt Pipe PE														
24" Pipe	30.00 lf	14.43 /lf	16.78 /mh	433	45.00 /lf	1,350	-		-	-	-	-	59.43 /lf	1,783
Std Wt Pipe PE		*/lf*		*433*		*1,350*							*/lf*	*1,783*
15230.301 XH Pipe PE														
30" Pipe	60.00 lf	2.62 /lf	16.78 /mh	157	61.00 /lf	3,660	-		-	-	-	-	63.62 /lf	3,817
XH Pipe PE		*/lf*		*157*		*3,660*							*/lf*	*3,817*
15230.320 CS XH Tee														
48" Wye	2.00 ea	383.26 /ea	16.78 /mh	767	6,439.00 /ea	12,878	-		-	-	-	-	6,822.26 /ea	13,645
CS XH Tee		*/ea*		*767*		*12,878*							*/ea*	*13,645*
15230.330 CS XH Con Red														
48 x 30 Reducer	4.00 ea	183.41 /ea	16.78 /mh	734	3,167.00 /ea	12,668	-		-	-	-	-	3,350.41 /ea	13,402
30 x 24 Reducer	4.00 ea	183.41 /ea	16.78 /mh	734	3,167.00 /ea	12,668	-		-	-	-	-	3,350.41 /ea	13,402
CS XH Con Red		*/ea*		*1,467*		*25,336*							*/ea*	*26,803*
15820.002 Duct Accessories														
Intake Duct	1.00 ea	150.00 /ea	150.00 /ea	150	200.00 /ea	200			-	-	-	-	350.00 /ea	350
Duct Accessories		*/ls*		*150*		*200*							*/ls*	*350*
15830.002 Fans														
Exhaust Fan	1.00 ea	250.00 /ea	250.00 /ea	250	2,500.00 /ea	2,500			-	-	-	-	2,750.00 /ea	2,750
Fans		*/ls*		*250*		*2,500*							*/ls*	*2,750*
16000.001 Electrical Sub														
120 Volt Meter/Disconnect/Wire	1.00 ls	-	-	-	-	-	15,000		-	-	-	-	15,000.00 /ls	15,000

Spreadsheet Level	Takeoff Quantity	Labor Cost/Unit	Labor Price	Labor Amount	Material Price	Material Amount	Sub Amount	Sub Name	Equip Price	Equip Amount	Other Price	Other Amount	Total Cost/Unit	Total Amount
16000.001 Electrical Sub														
Remote	1.00 ls	-	-	-	-	-	***20,000***		-	-	-	-	20,000.00 /ls	20,000
Telemetry/Antenna/Wiring														
Electrical Sub		*/sf*					*35,000*						*/sf*	*35,000*
1300 Mapleton Pressure Reducing Vault, Station 10+07				**15,818**		**260,281**	**35,000**			**40**				**311,139**
1400 Mapleton Pressure Reducing Vault, Station 260+00														
2519.310 Dresser Couplings														
Dresser Couplings 30"	4.00 ea	22.82 /ea	45.64 /ch	91	3,000.00 /ea	12,000	-		/ch		-	-	3,022.82 /ea	12,091
Dresser Couplings 24"	2.00 ea	22.82 /ea	45.64 /ch	46	2,400.00 /ea	4,800	-		/ch		-	-	2,422.82 /ea	4,846
Dresser Couplings		*/ea*		*137*		*16,800*							*/ea*	*16,937*
2531.004 Manholes 4'														
Manhole 4' Flat Cover	1.00 ea	45.69 /ea	45.69 /ch	46	90.00 /ea	90	-		40.00 /ch	40	-	-	175.69 /ea	176
Manholes 4'		*/ea*		*46*		*90*				*40*			*/ea*	*176*
3100.120 Forms- S-O-G														
S.O.G. Edge Form < 1'	96.00 sf	1.41 /sf	15.68 /mh	135	0.75 /sf	76	-		-	-	-	-	2.20 /sf	211
Forms- S-O-G		*/sf*		*135*		*76*							*/sf*	*211*
3100.124 Forms- Suspended Slab														
Form Suspended Slab 0-15'	540.00 sf	1.41 /sf	15.68 /mh	762	1.00 /sf	567	-		-	-	-	-	2.46 /sf	1,329
Floor Opening Forms	32.00 lf	1.41 /lf	15.68 /mh	45	0.50 /lf	17	-		-	-	-	-	1.94 /lf	62
Slab Edge Form < 1'	96.00 sf	1.08 /sf	15.68 /mh	104	2.00 /sf	202	-		-	-	-	-	3.18 /sf	305
Forms- Suspended Slab		*/sf*		*911*		*785*							*/sf*	*1,696*
3100.180 Forms- Wall Forms														
Rented Form System 12-16'	2,688.00 sf	2.34 /sf	15.68 /mh	6,279	1.25 /sf	3,528	-		-	-	-	-	3.65 /sf	9,807
Forms- Wall Forms		*/sf*		*6,279*		*3,528*							*/sf*	*9,807*
3100.310 Forms- Strip & Oil														
Strip & Oil Suspended Slab Frm	540.00 sf	0.06 /sf	12.08 /mh	33	-	-	-		-	-	-	-	0.06 /sf	33
Strip & Oil Wall Forms	2,688.00 sf	0.06 /sf	12.08 /mh	162	-	-	-		-	-	-	-	0.06 /sf	162
Strip & Oil SOG Form	96.00 sf	0.06 /sf	12.08 /mh	6	-	-	-		-	-	-	-	0.06 /sf	6
Forms- Strip & Oil		*/sf*		*201*									*/sf*	*201*
3150.192 Forms- Wall Access														
Wall Bulkhead Forms	112.00 sf	4.70 /sf	15.68 /mh	527	1.00 /sf	118	-		-	-	-	-	5.75 /sf	644
Forms- Wall Access		*/ls*		*527*		*118*							*/ls*	*644*
3150.198 Forms- Wall Inserts														
Pour Strips	636.00 lf	0.78 /lf	15.68 /mh	499	0.16 /lf	120	-		-	-	-	-	0.97 /lf	619
Forms- Wall Inserts		*/ls*		*499*		*120*							*/ls*	*619*
3210.104 Rebar- by Lbs/CY														
SOG Rebar	0.50 tn	170.60 /tn	17.06 /mh	85	560.00 /tn	294	-		-	-	-	-	758.60 /tn	379
Wall Rebar	1.25 tn	170.60 /tn	17.06 /mh	212	560.00 /tn	732	-		-	-	-	-	758.49 /tn	944
Suspended Slab Rebar	1.00 tn	170.60 /tn	17.06 /mh	171	560.00 /tn	588	-		-	-	-	-	758.60 /tn	759
Rebar- by Lbs/CY		*/ton*		*468*		*1,614*							*/ton*	*2,082*
3220.110 Wire Mesh- Rolls														
Mesh Support - bricks	77.00 ea	0.03 /ea	17.06 /mh	3	0.18 /ea	15	-		-	-	-	-	0.22 /ea	17

Spreadsheet Level	Takeoff Quantity	Labor Cost/Unit	Labor Price	Labor Amount	Material Price	Material Amount	Sub Amount	Sub Name	Equip Price	Equip Amount	Other Price	Other Amount	Total Cost/Unit	Total Amount
Wire Mesh- Rolls		*/sf*		*3*		*15*							*/sf*	*17*
3310.100 Concrete- Buy														
3500 psi Concrete	20.00 cy	-	-	-	71.00 /cy	1,491	-		-	-	-	-	74.55 /cy	1,491
3500 psi Concrete	49.78 cy	-	-	-	71.00 /cy	3,711	-		-	-	-	-	74.55 /cy	3,711
3500 psi Concrete	20.00 cy	-	-	-	71.00 /cy	1,491	-		-	-	-	-	74.55 /cy	1,491
Concrete- Buy		*/cy*				*6,693*							*/cy*	*6,693*
3310.230 Place- S-O-G														
Pump Place Slab on Grade	20.00 cy	7.38 /cy	14.75 /mh	148	-	-	-		-	-	-	-	7.38 /cy	148
Place- S-O-G		*/cy*		*148*									*/cy*	*148*
3310.240 Place- Suspended Slab														
Crane Place Suspended Slab	20.00 cy	10.31 /cy	14.75 /mh	206	-	-	-		-	-	-	-	10.31 /cy	206
Place- Suspended Slab		*/cy*		*206*									*/cy*	*206*
3310.250 Place- Walls														
Pump Place Walls	49.78 cy	10.31 /cy	14.75 /mh	513	-	-	-		-	-	-	-	10.31 /cy	513
Place- Walls		*/cy*		*513*									*/cy*	*513*
3350.110 Finish Flatwork														
Finish- Hard Trowel	540.00 sf	0.21 /sf	14.18 /mh	114	0.03 /sf	16	-		-	-	-	-	0.24 /sf	130
Finish- Hard Trowel	540.00 sf	0.21 /sf	14.18 /mh	114	0.03 /sf	16	-		-	-	-	-	0.24 /sf	130
Finish- Top of Wall & Curb	96.00 sf	0.11 /sf	14.18 /mh	11	-	-	-		-	-	-	-	0.11 /sf	11
Finish Flatwork		*/sf*		*239*		*32*							*/sf*	*271*
3350.130 Patch & Grind														
Grind/Patch Walls	2,688.00 sf	0.18 /sf	12.08 /mh	484	0.01 /sf	27	-		-	-	-	-	0.19 /sf	511
Patch & Grind		*/sf*		*484*		*27*							*/sf*	*511*
3390.170 Curing														
Liquid Curing Compounds	540.00 sf	0.02 /sf	12.08 /mh	13	0.01 /sf	6	-		-	-	-	-	0.04 /sf	19
Liquid Curing Compounds	2,688.00 sf	0.02 /sf	12.08 /mh	65	0.01 /sf	28	-		-	-	-	-	0.04 /sf	93
Liquid Curing Compounds	540.00 sf	0.02 /sf	12.08 /mh	13	0.01 /sf	6	-		-	-	-	-	0.04 /sf	19
Curing		*/sf*		*91*		*40*							*/sf*	*131*
3390.180 Hardener														
Seal Floors	540.00 sf	0.02 /sf	12.08 /mh	13	0.05 /sf	28	-		-	-	-	-	0.08 /sf	41
Hardener		*/sf*		*13*		*28*							*/sf*	*41*
5510.100 Stairs & Ladders														
Pit Ladder	1.00 ea	20.82 /ea	41.64 /mh	21	75.00 /ea	75	-		-	-	-	-	95.82 /ea	96
Stairs & Ladders		*/ea*		*21*		*75*							*/ea*	*96*
11295.010 Valves- Butterfly Flange														
Fige Bttly Valve/Elect Oper 24"	4.00 ea	132.55 /ea	13.26 /mh	530	7,000.00 /ea	28,000	-		-	-	-	-	7,132.55 /ea	28,530
Valves- Butterfly Flange		*/ea*		*530*		*28,000*							*/ea*	*28,530*
11295.020 Valves- Regulating														
24" Sleeve Valve	2.00 ea	106.04 /ea	13.26 /mh	212	64,800.00 /ea	129,600	-		-	-	-	-	64,906.04 /ea	129,812

Spreadsheet Level	Takeoff Quantity	Labor Cost/Unit	Labor Price	Labor Amount	Material Price	Material Amount	Sub Amount	Sub Name	Equip Price	Equip Amount	Other Price	Other Amount	Total Cost/Unit	Total Amount
Valves- Regulating		*/ls*		*212*		*129,600*							*/ls*	*129,812*
15060.200 Pipe Support														
Pipe Support	6.00 ea	22.00 /ea	22.00 /ea	132	109.41 /ea	656	-		-	-	-	-	131.41 /ea	788
Pipe Support		*/ea*		*132*		*656*							*/ea*	*788*
15120.002 Bolt - Nut & Gasket Sets														
Seal, Pipe Inlet	3.00 ea	100.00 /ea	100.00 /ea	300	220.00 /ea	660	-		-	-	-	-	320.00 /ea	960
Bolt - Nut & Gasket Sets		*/ea*		*300*		*660*							*/ea*	*960*
15120.020 Exp Joint Flange SS														
24" Flow Meter	2.00 ea	250.00 /ea	250.00 /ea	500	12,700.00 /ea	25,400	-		/ea		-	-	12,950.00 /ea	25,900
Exp Joint Flange SS		*/ea*		*500*		*25,400*							*/ea*	*25,900*
15230.201 Std Wt Pipe PE														
24" Pipe	30.00 lf	14.43 /lf	16.78 /mh	433	45.00 /lf	1,350	-		-	-	-	-	59.43 /lf	1,783
Std Wt Pipe PE		*/lf*		*433*		*1,350*							*/lf*	*1,783*
15230.301 XH Pipe PE														
30" Pipe	60.00 lf	2.62 /lf	16.78 /mh	157	61.00 /lf	3,660	-		-	-	-	-	63.62 /lf	3,817
48" Steel Pipe	50.00 lf	24.50 /lf	16.78 /mh	1,225	185.77 /lf	9,289	-		12.00 /lf	600	-	-	222.27 /lf	11,114
XH Pipe PE		*/lf*		*1,382*		*12,949*				*600*			*/lf*	*14,931*
15230.320 CS XH Tee														
48" Wye	2.00 ea	383.26 /ea	16.78 /mh	767	6,439.00 /ea	12,878	-		-	-	-	-	6,822.26 /ea	13,645
48" 90 Ell	3.00 ea	383.26 /ea	16.78 /mh	1,150	6,439.00 /ea	19,317	-		-	-	-	-	6,822.26 /ea	20,467
CS XH Tee		*/ea*		*1,916*		*32,195*							*/ea*	*34,111*
15230.330 CS XH Con Red														
48 x 30 Reducer	4.00 ea	183.41 /ea	16.78 /mh	734	3,167.00 /ea	12,668	-		-	-	-	-	3,350.41 /ea	13,402
30 x 24 Reducer	4.00 ea	183.41 /ea	16.78 /mh	734	3,167.00 /ea	12,668	-		-	-	-	-	3,350.41 /ea	13,402
CS XH Con Red		*/ea*		*1,467*		*25,336*							*/ea*	*26,803*
15820.002 Duct Accessories														
Intake Duct	1.00 ea	150.00 /ea	150.00 /ea	150	200.00 /ea	200			-	-	-	-	350.00 /ea	350
Duct Accessories		*/ls*		*150*		*200*							*/ls*	*350*
15830.002 Fans														
Exhaust Fan	1.00 ea	250.00 /ea	250.00 /ea	250	2,500.00 /ea	2,500			-	-	-	-	2,750.00 /ea	2,750
Fans		*/ls*		*250*		*2,500*							*/ls*	*2,750*
16000.001 Electrical Sub														
120 Volt Meter/Disconnect/Wire	1.00 ls	-	-	-	-	-	15,000		-	-	-	-	15,000.00 /ls	15,000
Remote Telemetry/Antenna/Wiring	1.00 ls	-	-	-	-	-	***20,000***		-	-	-	-	20,000.00 /ls	20,000
Electrical Sub		*/sf*					*35,000*						*/sf*	*35,000*
1400 Mapleton Pressure Reducing Vault, Station 250+00				**18,192**		**288,886**	**35,000**			**640**				**342,719**
1500 Mapleton Lateral Canal Discharge, Station 310+40														
2315.925 Import Fill														
Fill Gravel Process	6.67 cy	-	-	-	6.50 /cy	56	-		-	-	-	-	8.45 /cy	56
Fill Gravel Process	15.56 cy	-	-	-	6.50 /cy	131	-		-	-	-	-	8.45 /cy	131
Fill Gravel Process	3.70 cy	-	-	-	6.50 /cy	31	-		-	-	-	-	8.45 /cy	31

Spreadsheet Level	Takeoff Quantity	Labor Cost/Unit	Labor Price	Labor Amount	Material Price	Material Amount	Sub Amount	Sub Name	Equip Price	Equip Amount	Other Price	Other Amount	Total Cost/Unit	Total Amount
Import Fill		*/cy*				*219*							*/cy*	*219*
2317.105 Building Excavation														
Bldg Excavation Haul Offsite	80.00 cy	1.40 /cy	280.16 /cd	112	-	-	-		960.00 /cd	384	-	-	6.20 /cy	496
Bldg Excavation Haul Offsite	186.67 cy	1.40 /cy	280.16 /cd	261	-	-	-		960.00 /cd	896	-	-	6.20 /cy	1,157
Bldg Excavation Haul Offsite	29.63 cy	1.40 /cy	280.16 /cd	42	-	-	-		960.00 /cd	142	-	-	6.20 /cy	184
Building Excavation		*/cy*		*415*						*1,422*			*/cy*	*1,837*
2318.206 Site Fill- Clay														
Site Fill Clay-Backhoe/Truck	200.00 cy	1.01 /cy	376.80 /cd	201	10.00 /cy	2,600	-		1,448.00 /cd	772	-	-	17.87 /cy	3,573
Site Fill- Clay		*/cy*		*201*		*2,600*				*772*			*/cy*	*3,573*
2319.316 Bldg Fill- Gravel														
Bldg Fill Gravel	6.67 cy	1.88 /cy	376.80 /cd	13	8.00 /cy	69	-		1,120.00 /cd	37	-	-	17.89 /cy	119
Bldg Fill Gravel	15.56 cy	1.88 /cy	376.80 /cd	29	8.00 /cy	162	-		1,120.00 /cd	87	-	-	17.88 /cy	278
Bldg Fill Gravel	3.70 cy	1.88 /cy	376.80 /cd	7	8.00 /cy	39	-		1,120.00 /cd	21	-	-	17.88 /cy	66
Bldg Fill- Gravel		*/cy*		*49*		*270*				*145*			*/cy*	*464*
2370.100 Rip Rap														
Rip Rap Machine Place	550.00 sf	0.83 /sf	41.67 /ch	458	5.00 /sf	2,750	-		35.00 /ch	385	-	-	6.53 /sf	3,593
Rip Rap		*/sf*		*458*		*2,750*				*385*			*/sf*	*3,593*
2519.310 Dresser Couplings														
Dresser Couplings 30"	4.00 ea	22.82 /ea	45.64 /ch	91	4,800.00 /ea	19,200	-		/ch		-	-	4,822.82 /ea	19,291
Dresser Couplings		*/ea*		*91*		*19,200*							*/ea*	*19,291*
2531.004 Manholes 4'														
Manhole 4' Flat Cover	1.00 ea	45.69 /ea	45.69 /ch	46	90.00 /ea	90	-		40.00 /ch	40	-	-	175.69 /ea	176
Manholes 4'		*/ea*		*46*		*90*				*40*			*/ea*	*176*
2740.830 Paving Textiles														
Geo Textile	120.00 sy	0.03 /sy	12.08 /ch	4	2.00 /sy	264	-		-	-	-	-	2.23 /sy	268
Paving Textiles		*/sy*		*4*		*264*							*/sy*	*268*
3100.120 Forms- S-O-G														
S.O.G. Edge Form < 1'	72.00 sf	1.41 /sf	15.68 /mh	102	0.75 /sf	57	-		-	-	-	-	2.20 /sf	158
S.O.G. Edge Form < 1'	104.00 sf	1.41 /sf	15.68 /mh	147	0.75 /sf	82	-		-	-	-	-	2.20 /sf	229
S.O.G. Edge Form < 1'	40.00 sf	1.41 /sf	15.68 /mh	56	0.75 /sf	32	-		-	-	-	-	2.20 /sf	88
Forms- S-O-G		*/sf*		*305*		*170*							*/sf*	*475*
3100.124 Forms- Suspended Slab														
Form Suspended Slab 0-15'	180.00 sf	1.41 /sf	15.68 /mh	254	1.00 /sf	189	-		-	-	-	-	2.46 /sf	443
Floor Opening Forms	66.00 lf	1.41 /lf	15.68 /mh	93	0.50 /lf	35	-		-	-	-	-	1.94 /lf	128
Slab Edge Form < 1'	72.00 sf	1.08 /sf	15.68 /mh	78	2.00 /sf	151	-		-	-	-	-	3.18 /sf	229
Forms- Suspended Slab		*/sf*		*425*		*375*							*/sf*	*800*
3100.180 Forms- Wall Forms														
Rented Form System 4-8'	240.00 sf	2.34 /sf	15.68 /mh	561	1.25 /sf	315	-		-	-	-	-	3.65 /sf	876

Spreadsheet Level	Takeoff Quantity	Labor Cost/Unit	Labor Price	Labor Amount	Material Price	Material Amount	Sub Amount	Sub Name	Equip Price	Equip Amount	Other Price	Other Amount	Total Cost/Unit	Total Amount
3100.180 Forms- Wall Forms														
Rented Form System 8-12'	1,440.00 sf	2.34 /sf	15.68 /mh	3,364	1.25 /sf	1,890	-		-	-	-	-	3.65 /sf	5,254
Forms- Wall Forms		*/sf*		*3,924*		*2,205*							*/sf*	*6,129*
3100.310 Forms- Strip & Oil														
Strip & Oil Suspended Slab Frm	180.00 sf	0.06 /sf	12.08 /mh	11	-	-	-		-	-	-	-	0.06 /sf	11
Strip & Oil Wall Forms	1,440.00 sf	0.06 /sf	12.08 /mh	87	-	-	-		-	-	-	-	0.06 /sf	87
Strip & Oil Wall Forms	240.00 sf	0.06 /sf	12.08 /mh	15	-	-	-		-	-	-	-	0.06 /sf	15
Strip & Oil SOG Form	72.00 sf	0.06 /sf	12.08 /mh	4	-	-	-		-	-	-	-	0.06 /sf	4
Strip & Oil SOG Form	104.00 sf	0.06 /sf	12.08 /mh	6	-	-	-		-	-	-	-	0.06 /sf	6
Strip & Oil SOG Form	40.00 sf	0.06 /sf	12.08 /mh	2	-	-	-		-	-	-	-	0.06 /sf	2
Forms- Strip & Oil		*/sf*		*125*									*/sf*	*125*
3150.192 Forms- Wall Access														
Wall Bulkhead Forms	60.00 sf	4.70 /sf	15.68 /mh	282	1.00 /sf	63	-		-	-	-	-	5.75 /sf	345
Wall Bulkhead Forms	12.00 sf	4.70 /sf	15.68 /mh	56	1.00 /sf	13	-		-	-	-	-	5.75 /sf	69
Forms- Wall Access		*/s*		*339*		*76*							*/s*	*414*
3150.198 Forms- Wall Inserts														
Pour Strips	252.00 lf	0.78 /lf	15.68 /mh	198	0.18 /lf	48	-		-	-	-	-	0.97 /l	245
Forms- Wall Inserts		*/s*		*198*		*48*							*/s*	*245*
3210.104 Rebar- by Lbs/CY														
SOG Rebar	0.17 tn	170.60 /tn	17.06 /mh	28	560.00 /tn	98	-		-	-	-	-	757.40 /tn	126
SOG Rebar	0.39 tn	170.60 /tn	17.06 /mh	66	560.00 /tn	228	-		-	-	-	-	757.94 /tn	295
SOG Rebar	0.09 tn	170.60 /tn	17.06 /mh	16	560.00 /tn	55	-		-	-	-	-	760.80 /tn	71
Wall Rebar	0.67 tn	170.60 /tn	17.06 /mh	114	560.00 /tn	392	-		-	-	-	-	758.30 /tn	506
Wall Rebar	0.11 tn	170.60 /tn	17.06 /mh	19	560.00 /tn	66	-		-	-	-	-	760.90 /tn	84
Suspended Slab Rebar	0.33 tn	170.60 /tn	17.06 /mh	57	560.00 /tn	196	-		-	-	-	-	759.20 /tn	253
Rebar- by Lbs/CY		*/ton*		*300*		*1,035*							*/ton*	*1,335*
3220.110 Wire Mesh- Rolls														
Mesh Support - bricks	33.00 ea	0.03 /ea	17.06 /mh	1	0.18 /ea	6	-		-	-	-	-	0.22 /ea	7
Mesh Support - bricks	65.00 ea	0.03 /ea	17.06 /mh	2	0.18 /ea	12	-		-	-	-	-	0.22 /ea	15
Mesh Support - bricks	19.00 ea	0.03 /ea	17.06 /mh	1	0.18 /ea	4	-		-	-	-	-	0.22 /ea	4
Wire Mesh- Rolls		*/sf*		*4*		*22*							*/sf*	*26*
3310.100 Concrete- Buy														
3500 psi Concrete	6.67 cy	-	-	-	71.00 /cy	497	-		-	-	-	-	74.55 /cy	497
3500 psi Concrete	26.67 cy	-	-	-	71.00 /cy	1,988	-		-	-	-	-	74.55 /cy	1,988
3500 psi Concrete	6.67 cy	-	-	-	71.00 /cy	497	-		-	-	-	-	74.55 /cy	497
3500 psi Concrete	15.56 cy	-	-	-	71.00 /cy	1,160	-		-	-	-	-	74.55 /cy	1,160
3500 psi Concrete	3.70 cy	-	-	-	71.00 /cy	276	-		-	-	-	-	74.55 /cy	276
3500 psi Concrete	4.44 cy	-	-	-	71.00 /cy	331	-		-	-	-	-	74.55 /cy	331
Concrete- Buy		*/cy*				*4,749*							*/cy*	*4,749*
3310.230 Place- S-O-G														
Pump Place Slab on Grade	6.67 cy	7.38 /cy	14.75 /mh	49	-	-	-		-	-	-	-	7.38 /cy	49
Pump Place Slab on Grade	15.56 cy	7.38 /cy	14.75 /mh	115	-	-	-		-	-	-	-	7.38 /cy	115
Pump Place Slab on Grade	3.70 cy	7.38 /cy	14.75 /mh	27	-	-	-		-	-	-	-	7.38 /cy	27
Place- S-O-G		*/cy*		*191*									*/cy*	*191*

Spreadsheet Level	Takeoff Quantity	Labor Cost/Unit	Labor Price	Labor Amount	Material Price	Material Amount	Sub Amount	Sub Name	Equip Price	Equip Amount	Other Price	Other Amount	Total Cost/Unit	Total Amount
3310.240 Place- Suspended Slab														
Pump Place Suspended Slab	6.67 cy	7.38 /cy	14.75 /mh	49	-	-	-		-	-	-	-	7.38 /cy	49
Place- Suspended Slab		*/cy*		*49*									*/cy*	*49*
3310.250 Place- Walls														
Pump Place Walls	26.67 cy	10.31 /cy	14.75 /mh	275	-	-	-		-	-	-	-	10.31 /cy	275
Pump Place Walls	4.44 cy	10.31 /cy	14.75 /mh	46	-	-	-		-	-	-	-	10.31 /cy	46
Place- Walls		*/cy*		*321*									*/cy*	*321*
3350.110 Finish Flatwork														
Finish- Hard Trowel	180.00 sf	0.21 /sf	14.18 /mh	38	0.03 /sf	5	-		-	-	-	-	0.24 /sf	43
Finish- Hard Trowel	180.00 sf	0.21 /sf	14.18 /mh	38	0.03 /sf	5	-		-	-	-	-	0.24 /sf	43
Finish- Hard Trowel	420.00 sf	0.21 /sf	14.18 /mh	89	0.03 /sf	13	-		-	-	-	-	0.24 /sf	101
Finish- Hard Trowel	100.00 sf	0.21 /sf	14.18 /mh	21	0.03 /sf	3	-		-	-	-	-	0.24 /sf	24
Finish- Top of Wall & Curb	72.00 sf	0.11 /sf	14.18 /mh	8	-	-	-		-	-	-	-	0.11 /sf	8
Finish- Top of Wall & Curb	20.00 sf	0.11 /sf	14.18 /mh	2	-	-	-		-	-	-	-	0.11 /sf	2
Finish Flatwork		*/sf*		*196*		*26*							*/sf*	*223*
3350.130 Patch & Grind														
Grind/Patch Walls	1,440.00 sf	0.18 /sf	12.08 /mh	259	0.01 /sf	14	-		-	-	-	-	0.19 /sf	274
Grind/Patch Walls	240.00 sf	0.18 /sf	12.08 /mh	43	0.01 /sf	2	-		-	-	-	-	0.19 /sf	46
Patch & Grind		*/sf*		*302*		*17*							*/sf*	*319*
3390.170 Curing														
Liquid Curing Compounds	180.00 sf	0.02 /sf	12.08 /mh	4	0.01 /sf	2	-		-	-	-	-	0.04 /sf	6
Liquid Curing Compounds	1,440.00 sf	0.02 /sf	12.08 /mh	35	0.01 /sf	15	-		-	-	-	-	0.04 /sf	50
Liquid Curing Compounds	180.00 sf	0.02 /sf	12.08 /mh	4	0.01 /sf	2	-		-	-	-	-	0.04 /sf	6
Liquid Curing Compounds	420.00 sf	0.02 /sf	12.08 /mh	10	0.01 /sf	4	-		-	-	-	-	0.04 /sf	15
Liquid Curing Compounds	100.00 sf	0.02 /sf	12.08 /mh	2	0.01 /sf	1	-		-	-	-	-	0.04 /sf	3
Liquid Curing Compounds	240.00 sf	0.02 /sf	12.08 /mh	6	0.01 /sf	3	-		-	-	-	-	0.04 /sf	8
Curing		*/sf*		*62*		*27*							*/sf*	*89*
3390.180 Hardener														
Seal Floors	180.00 sf	0.02 /sf	12.08 /mh	4	0.05 /sf	9	-		-	-	-	-	0.08 /sf	14
Seal Floors	420.00 sf	0.02 /sf	12.08 /mh	10	0.05 /sf	22	-		-	-	-	-	0.08 /sf	32
Seal Floors	100.00 sf	0.02 /sf	12.08 /mh	2	0.05 /sf	5	-		-	-	-	-	0.08 /sf	8
Hardener		*/sf*		*17*		*37*							*/sf*	*54*
5510.100 Stairs & Ladders														
Pit Ladder	1.00 ea	20.82 /ea	41.64 /mh	21	75.00 /ea	75	-		-	-	-	-	95.82 /ea	96
Stairs & Ladders		*/ls*		*21*		*75*							*/ls*	*96*
5530.200 Grating- Steel Galvanized														
Gal Steel Floor Grating 1.25"	90.00 sf	0.57 /sf	16.14 /mh	51	5.00 /sf	450	-		-	-	-	-	5.57 /sf	501
Grating- Steel Galvanized		*/sf*		*51*		*450*							*/sf*	*501*

Spreadsheet Level	Takeoff Quantity	Labor Cost/Unit	Labor Price	Labor Amount	Material Price	Material Amount	Sub Amount	Sub Name	Equip Price	Equip Amount	Other Price	Other Amount	Total Cost/Unit	Total Amount
11392.010 Weirs														
Weir, Steel	30.00 lf	232.47 /lf	15.50 /mh	6,974	2.50 /lf	75	-		-	-	-	-	234.97 /lf	7,049
Weirs		*/ea*		*6,974*		*75*							*/ea*	*7,049*
15120.002 Bolt - Nut & Gasket Sets														
Seal, Pipe Inlet	1.00 ea	100.00 /ea	100.00 /ea	100	220.00 /ea	220	-		-	-	-	-	320.00 /ea	320
Seal, Pipe Inlet	1.00 ea	100.00 /ea	100.00 /ea	100	220.00 /ea	220	-		-	-	-	-	320.00 /ea	320
Bolt - Nut & Gasket Sets		*/ea*		*200*		*440*							*/ea*	*640*
15230.201 Std Wt Pipe PE														
24" Pipe	20.00 lf	14.43 /lf	16.78 /mh	289	45.00 /lf	900	-		-	-	-	-	59.43 /lf	1,189
Std Wt Pipe PE		*/lf*		*289*		*900*							*/lf*	*1,189*
15230.301 XH Pipe PE														
48" Steel Pipe	140.00 lf	24.50 /lf	16.78 /mh	3,430	185.77 /lf	26,008	-		12.00 /lf	1,680	-	-	222.27 /lf	31,118
XH Pipe PE		*/lf*		*3,430*		*26,008*				*1,680*			*/lf*	*31,118*
15230.320 CS XH Tee														
48" 90 Ell	2.00 ea	383.26 /ea	16.78 /mh	767	6,439.00 /ea	12,878	-		-	-	-	-	6,822.26 /ea	13,645
CS XH Tee		*/ea*		*767*		*12,878*							*/ea*	*13,645*
15230.330 CS XH Con Red														
24" Fittings	4.00 ea	183.41 /ea	16.78 /mh	734	3,167.00 /ea	12,668	-		-	-	-	-	3,350.41 /ea	13,402
CS XH Con Red		*/ea*		*734*		*12,668*							*/ea*	*13,402*
1500 Mapleton Lateral Canal Discharge, Station 310+40				**20,487**		**87,673**				**4,445**				**112,604**
1600 East Bench Canal Valve Vault, Station 310+41														
2315.925 Import Fill														
Fill Sand	2.37 cy	-	-	-	4.50 /cy	14	-		-	-	-	-	5.85 /cy	14
Import Fill		*/cy*				*14*							*/cy*	*14*
2317.105 Building Excavation														
Bldg Excavation Haul Offsite	23.70 cy	1.40 /cy	280.16 /cd	33	-	-	-		960.00 /cd	114	-	-	6.20 /cy	147
Building Excavation		*/cy*		*33*						*114*			*/cy*	*147*
2319.316 Bldg Fill- Gravel														
Bldg Fill Gravel	2.37 cy	1.89 /cy	376.80 /cd	4	/cy		-		1,120.00 /cd	13	-	-	7.49 /cy	18
Bldg Fill- Gravel		*/cy*		*4*						*13*			*/cy*	*18*
2502.020 Concrete Thrust Blocks														
Concrete Encasement, 3500 psi	5.00 cy	-	-	-	66.00 /cy	347	-		-	-	-	-	69.30 /cy	347
Concrete Thrust Blocks		*/cy*				*347*							*/cy*	*347*
2519.310 Dresser Couplings														
Dresser Couplings 24"	3.00 ea	22.82 /ea	45.64 /ch	68	2,400.00 /ea	7,200	-		/ch		-	-	2,422.82 /ea	7,268
Dresser Couplings		*/ea*		*68*		*7,200*							*/ea*	*7,268*
2531.004 Manholes 4'														
Manhole 4' Flat Cover	1.00 ea	45.69 /ea	45.69 /ch	46	90.00 /ea	90	-		40.00 /ch	40	-	-	175.69 /ea	176
Manholes 4'		*/ea*		*46*		*90*				*40*			*/ea*	*176*
3100.120 Forms- S-O-G														
S.O.G. Ecge Form < 1'	32.00 sf	1.41 /sf	15.68 /mh	45	0.75 /sf	25	-		-	-	-	-	2.20 /sf	70

Spreadsheet Level	Takeoff Quantity	Labor Cost/Unit	Labor Price	Labor Amount	Material Price	Material Amount	Sub Amount	Sub Name	Equip Price	Equip Amount	Other Price	Other Amount	Total Cost/Unit	Total Amount
Forms- S-O-G		*/sf*		*45*		*25*							*/sf*	*70*
3100.124 Forms- Suspended Slab														
Form Suspended Slab 0-15'	64.00 sf	1.41 /sf	15.68 /mh	90	1.00 /sf	67	-		-	-	-	-	2.46 /sf	158
Floor Opening Forms	16.00 lf	1.41 /lf	15.68 /mh	23	0.50 /lf	8	-		-	-	-	-	1.94 /lf	31
Slab Edge Form < 1'	32.00 sf	1.08 /sf	15.68 /mh	35	2.00 /sf	67	-		-	-	-	-	3.18 /sf	102
Forms- Suspended Slab		*/sf*		*147*		*143*							*/sf*	*290*
3100.180 Forms- Wall Forms														
Rented Form System 4-8'	512.00 sf	2.34 /sf	15.68 /mh	1,196	1.25 /sf	672	-		-	-	-	-	3.65 /sf	1,868
Forms- Wall Forms		*/sf*		*1,196*		*672*							*/sf*	*1,868*
3100.310 Forms- Strip & Oil														
Strip & Oil Suspended Slab Frm	64.00 sf	0.06 /sf	12.08 /mh	4	-	-	-		-	-	-	-	0.06 /sf	4
Strip & Oil Wall Forms	512.00 sf	0.06 /sf	12.08 /mh	31	-	-	-		-	-	-	-	0.06 /sf	31
Strip & Oil SOG Form	32.00 sf	0.06 /sf	12.08 /mh	2	-	-	-		-	-	-	-	0.06 /sf	2
Forms- Strip & Oil		*/sf*		*37*									*/sf*	*37*
3150.194 Forms- Wall Blockouts														
Wall Box Outs > 3'0" Sq.	96.00 sf	0.78 /sf	15.68 /mh	75	0.48 /sf	48	-		-	-	-	-	1.29 /sf	124
Forms- Wall Blockouts		*/ls*		*75*		*48*							*/ls*	*124*
3150.198 Forms- Wall Inserts														
Pour Strips	96.00 lf	0.78 /lf	15.68 /mh	75	0.18 /lf	18	-		-	-	-	-	0.97 /lf	93
Forms- Wall Inserts		*/ls*		*75*		*18*							*/ls*	*93*
3210.104 Rebar- by Lbs/CY														
SOG Rebar	0.06 tn	170.70 /tn	17.06 /mh	10	560.00 /tn	35	-		-	-	-	-	759.20 /tn	45
Wall Rebar	0.36 tn	170.60 /tn	17.06 /mh	61	560.00 /tn	209	-		-	-	-	-	758.90 /tn	270
Suspended Slab Rebar	0.12 tn	170.60 /tn	17.06 /mh	20	560.00 /tn	70	-		-	-	-	-	758.80 /tn	90
Rebar- by Lbs/CY		*/ton*		*91*		*314*							*/ton*	*405*
3220.110 Wire Mesh- Rolls														
Mesh Support - bricks	14.00 ea	0.03 /ea	17.06 /mh	0	0.18 /ea	3	-		-	-	-	-	0.22 /ea	3
Wire Mesh- Rolls		*/sf*		*0*		*3*							*/sf*	*3*
3310.100 Concrete- Buy														
3500 psi Concrete	2.37 cy	-	-	-	71.00 /cy	177	-		-	-	-	-	74.57 /cy	177
3500 psi Concrete	9.48 cy	-	-	-	71.00 /cy	707	-		-	-	-	-	74.55 /cy	707
3500 psi Concrete	2.37 cy	-	-	-	71.00 /cy	177	-		-	-	-	-	74.57 /cy	177
Concrete- Buy		*/cy*				*1,060*							*/cy*	*1,060*
3310.230 Place- S-O-G														
Pump Place Slab on Grade	2.37 cy	7.38 /cy	14.75 /mh	17	-	-	-		-	-	-	-	7.38 /cy	17
Place- S-O-G		*/cy*		*17*									*/cy*	*17*
3310.240 Place- Suspended Slab														
Pump Place Suspended Slab	2.37 cy	7.38 /cy	14.75 /mh	17	-	-	-		-	-	-	-	7.38 /cy	17
Place- Suspended Slab		*/cy*		*17*									*/cy*	*17*
3310.260 Place- Walls														
Pump Place Walls	9.48 cy	10.31 /cy	14.75 /mh	98	-	-	-		-	-	-	-	10.31 /cy	98

Spreadsheet Level	Takeoff Quantity	Labor Cost/Unit	Labor Price	Labor Amount	Material Price	Material Amount	Sub Amount	Sub Name	Equip Price	Equip Amount	Other Price	Other Amount	Total Cost/Unit	Total Amount
Place- Walls		*/cy*		*98*									*/cy*	*98*
3350.110 Finish Flatwork														
Finish- Hard Trowel	64.00 sf	0.21 /sf	14.18 /mh	14	0.03 /sf	2	-		-	-	-	-	0.24 /sf	15
Finish- Hard Trowel	64.00 sf	0.21 /sf	14.18 /mh	14	0.03 /sf	2	-		-	-	-	-	0.24 /sf	15
Finish- Top of Wall & Curb	32.00 sf	0.11 /sf	14.18 /mh	4	-	-	-		-	-	-	-	0.11 /sf	4
Finish Flatwork		*/sf*		*31*		*4*							*/sf*	*35*
3350.130 Patch & Grind														
Grind/Patch Walls	512.00 sf	0.18 /sf	12.08 /mh	92	0.01 /sf	5	-		-	-	-	-	0.19 /sf	97
Patch & Grind		*/sf*		*92*		*5*							*/sf*	*97*
3390.170 Curing														
Liquid Curing Compounds	64.00 sf	0.02 /sf	12.08 /mh	2	0.01 /sf	1	-		-	-	-	-	0.04 /sf	2
Liquid Curing Compounds	512.00 sf	0.02 /sf	12.08 /mh	12	0.01 /sf	5	-		-	-	-	-	0.04 /sf	18
Liquid Curing Compounds	64.00 sf	0.02 /sf	12.08 /mh	2	0.01 /sf	1	-		-	-	-	-	0.04 /sf	2
Curing		*/sf*		*15*		*7*							*/sf*	*22*
3390.180 Hardener														
Seal Floors	64.00 sf	0.02 /sf	12.08 /mh	2	0.05 /sf	3	-		-	-	-	-	0.08 /sf	5
Hardener		*/sf*		*2*		*3*							*/sf*	*5*
5510.100 Stairs & Ladders														
Pit Ladder	1.00 ea	20.82 /ea	41.64 /mh	21	75.00 /ea	75	-		-	-	-	-	95.82 /ea	96
Stairs & Ladders		*/ls*		*21*		*75*							*/ls*	*96*
11295.010 Valves- Butterfly Flange														
Fige Bfly Valve/Elect Oper 24"	2.00 ea	132.55 /ea	13.26 /mh	265	7,500.00 /ea	15,000	-		-	-	-	-	7,632.55 /ea	15,265
Valves- Butterfly Flange		*/ea*		*265*		*15,000*							*/ea*	*15,265*
15120.002 Bolt - Nut & Gasket Sets														
Seal, Pipe Inlet	1.00 ea	100.00 /ea	100.00 /ea	100	220.00 /ea	220	-		-	-	-	-	320.00 /ea	320
Seal, Pipe Inlet	1.00 ea	100.00 /ea	100.00 /ea	100	220.00 /ea	220	-		-	-	-	-	320.00 /ea	320
Bolt - Nut & Gasket Sets		*/ea*		*200*		*440*							*/ea*	*640*
15230.201 Std Wt Pipe PE														
24" Pipe	20.00 lf	14.43 /lf	16.78 /mh	289	45.00 /lf	900	-		-	-	-	-	59.43 /lf	1,189
Std Wt Pipe PE		*/lf*		*289*		*900*							*/lf*	*1,189*
15230.301 XH Pipe PE														
Welding per Joint - 27" & 24"	10.00 ea	894.00 /ea	894.00 /ea	8,940	62.50 /ea	625	-		50.00 /ea	500	-	-	1,006.50 /ea	10,065
XH Pipe PE		*/lf*		*8,940*		*625*				*500*			*/lf*	*10,065*
15230.330 CS XH Con Red														
24" Fittings	2.00 ea	183.41 /ea	16.78 /mh	367	3,167.00 /ea	6,334	-		-	-	-	-	3,350.41 /ea	6,701
27 x 24 Reducer	2.00 ea	183.41 /ea	16.78 /mh	367	3,167.00 /ea	6,334	-		-	-	-	-	3,350.41 /ea	6,701
CS XH Con Red		*/ea*		*734*		*12,668*							*/ea*	*13,402*
15820.002 Duct Accessories														
Intake/Exhaust Duct	2.00 ea	150.00 /ea	150.00 /ea	300	200.00 /ea	400			-	-	-	-	350.00 /ea	700
Duct Accessories		*/ls*		*300*		*400*							*/ls*	*700*

Spreadsheet Level	Takeoff Quantity	Labor Cost/Unit	Labor Price	Labor Amount	Material Price	Material Amount	Sub Amount	Sub Name	Equip Price	Equip Amount	Other Price	Other Amount	Total Cost/Unit	Total Amount
16000.001 Electrical Sub														
120 Volt Meter/Disconnect/Wire	1.00 ls	-	-	-	-	-	15,000		-	-	-	-	15,000.00 /ls	15,000
Remote Telemetry/Antenna/Wiring	1.00 ls	-	-	-	-	-	***20,000***		-	-	-	-	20,000.00 /ls	20,000
Electrical Sub		*/sf*					*35,000*						*/sf*	*35,000*
1600 East Bench Canal Valve Vault, Station 310+41				**12,840**		**40,061**	**35,000**			**667**				**88,568**
12000 Mapleton Springville Lateral Pipeline Alt 2				***5,125,109***		***8,598,689***	***681,991***			***1,434,833***		***287,900***		***16,128,521***

Partial Totals

Labor	5,125,109		131,850.775	hrs
Material	8,598,689			
Subcontract	681,991			
Equipment	1,434,833		15,760.963	hrs
Other	287,900			
	16,128,522	16,128,522		
GC's Labor Burden	304,794		32.000 %	C
Trade Labor Burden	1,168,336		28.000 %	C
Total w/Labor Burden	**1,473,130**	**17,601,652**		
Material Sales Tax	644,902		7.500 %	C
Subcontractor Bond	13,640		2.000 %	C
Equipment Fuel & Maintenance	344,360		24.000 %	C
Other Mark-up	20,153		7.000 %	C
Total Construction Value	1,023,055	18,624,707		
Profit	1,820,660		7.430 %	T
Contingency	3,724,941		20.000 %	T
Total Project w/o Ins/Bonds	**5,545,601**	**24,170,308**		
Builder's Risk Insurance	76,208		0.311 %	T
General Liability Insurance	122,521		0.500 %	T
Performance & Payment Bond	135,141			B
Project Total	333,870	24,504,178		
	Partial Total	***24,504,178***		

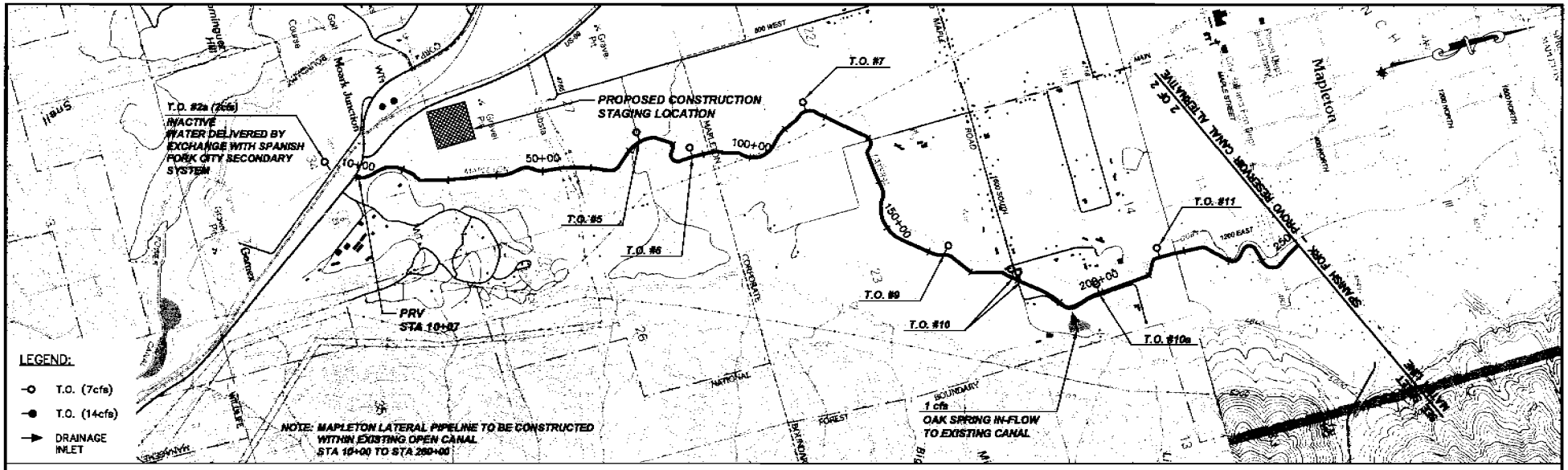

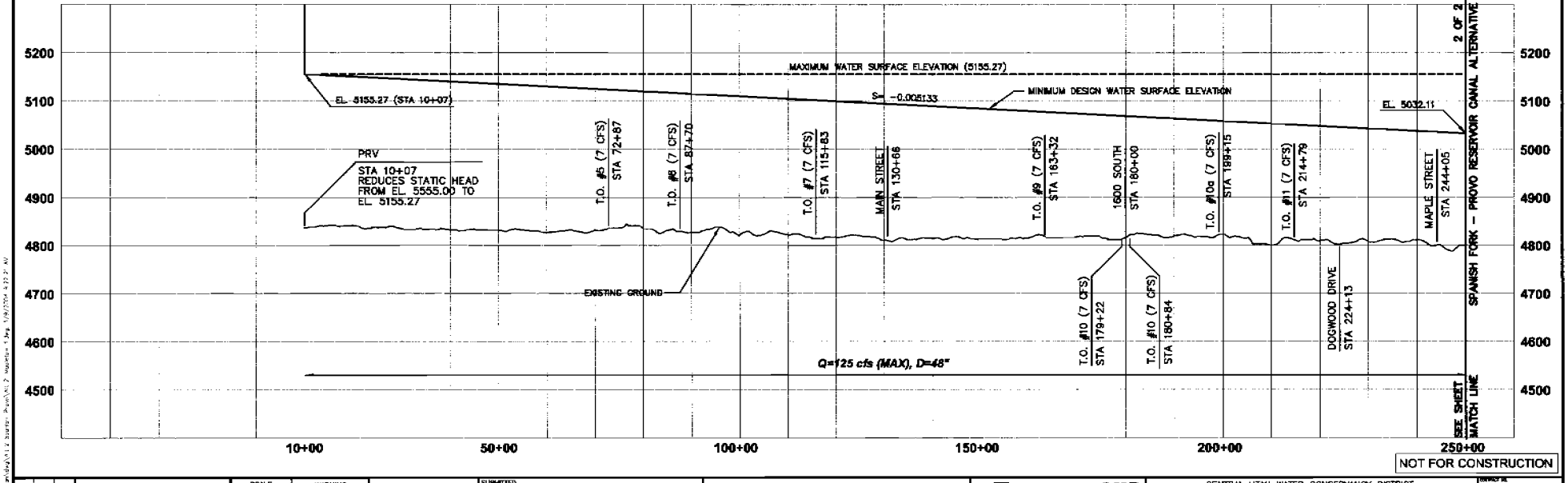

REV	DATE	BY	DESCRIPTION

SCALE: HORZ: 1" = 1000' VERT. 1" = 100'

WARNING: IF THIS BAR DOES NOT MEASURE 1" THEN DRAWING IS NOT TO SCALE

DESIGNED
DRAWN
CHECKED

SUBMITTED
(PROJECT MANAGER'S NAME) R. C. E. NO. DATE
(COMPANY OFFICER'S NAME) R. C. E. NO. DATE

MWH
MONTGOMERY WATSON HARZA

CUP

CENTRAL UTAH WATER CONSERVANCY DISTRICT
SPANISH FORK - PROVO RESERVOIR CANAL ALTERNATIVE
MAPLETON SPRINGVILLE LATERAL PIPELINE PLAN AND PROFILE
STA 10+00 TO STA 250+00

DRAWING NO. X
DATE FEBRUARY 2004
CONTRACT NO. ALT 2-MAPLETON-1
SHEET NO. 1 of 2

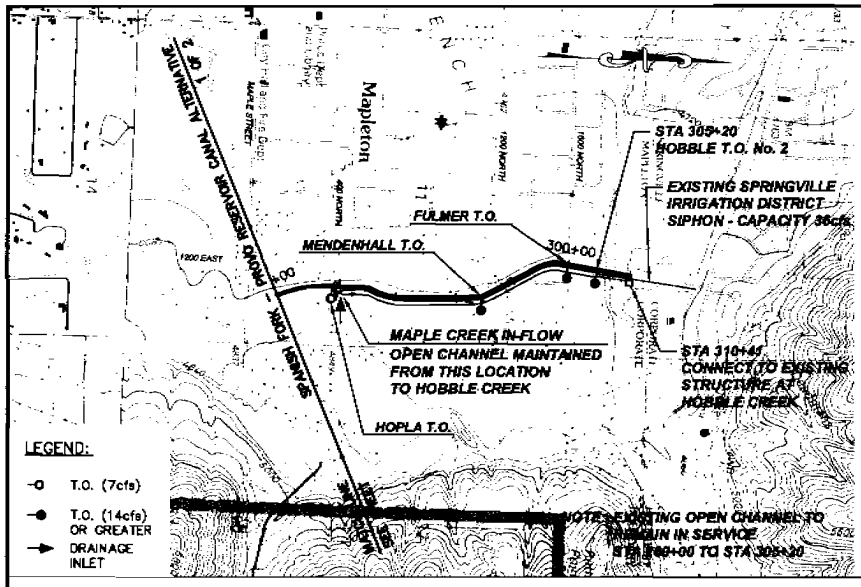

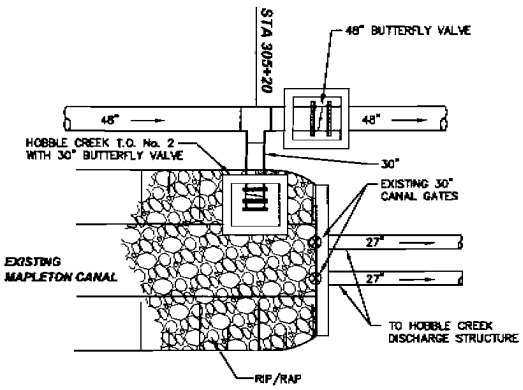

DETAIL - MAPLETON - SPRINGVILLE LATERAL
HOBBLE CREEK T.O. No. 2

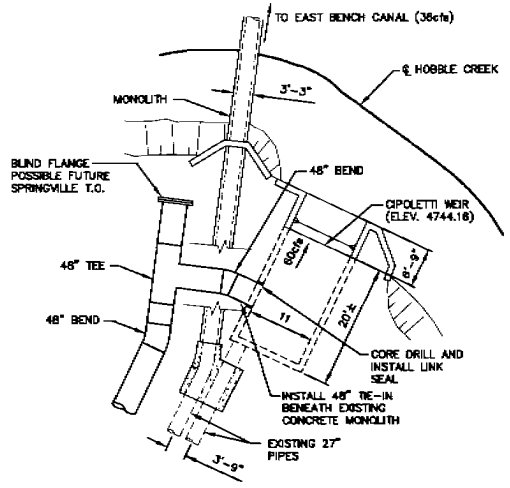

DETAIL - MODIFICATION OF EXISTING STRUCTURE AT HOBBLE CREEK

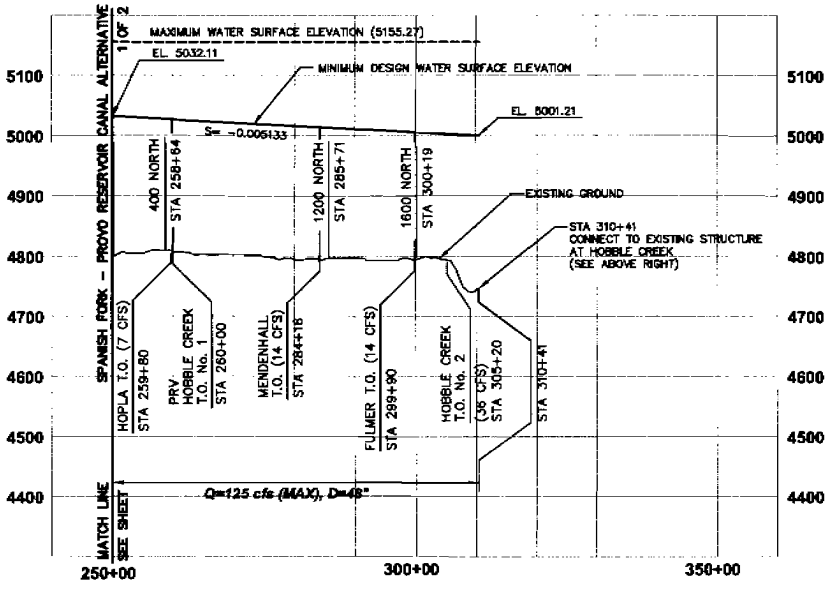

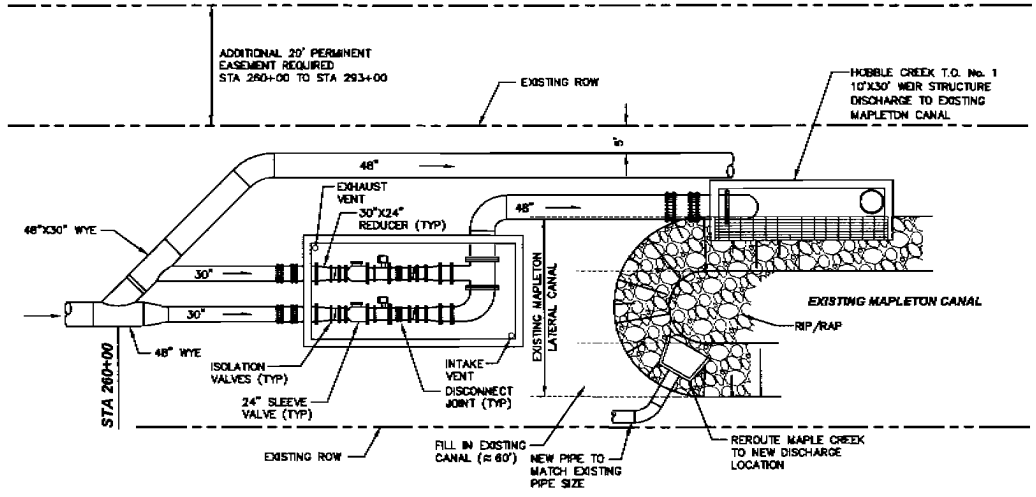

DETAIL - MAPLETON - SPRINGVILLE LATERAL
PRV AND PIPELINE DISCHARGE STRUCTURE (HOBBLE CREEK T.O. No. 1)

NOT FOR CONSTRUCTION

REV	DATE	BY	DESCRIPTION

SCALE: HORZ: 1" = 1000' VERT. 1" = 100'

WARNING: IF THIS BAR DOES NOT MEASURE 1" THEN DRAWING IS NOT TO SCALE.

DESIGNED
DRAWN
CHECKED

SUBMITTED
(PROJECT MANAGER'S NAME) R. C. E. NO. DATE
(COMPANY OFFICER'S NAME) R. C. E. NO. DATE

MWH
MONTGOMERY WATSON HARZA

CUP

CENTRAL UTAH WATER CONSERVANCY DISTRICT
SPANISH FORK - PROVO RESERVOIR CANAL ALTERNATIVE
MAPLETON SPRINGVILLE LATERAL PIPELINE PLAN AND PROFILE
STA 250+00 TO STA 310+41

DRAWING NO. X
DATE OCTOBER 2004
DRAWING NO. ALT. 2-MAPLETON-2
SHEET NO. 2 OF 2

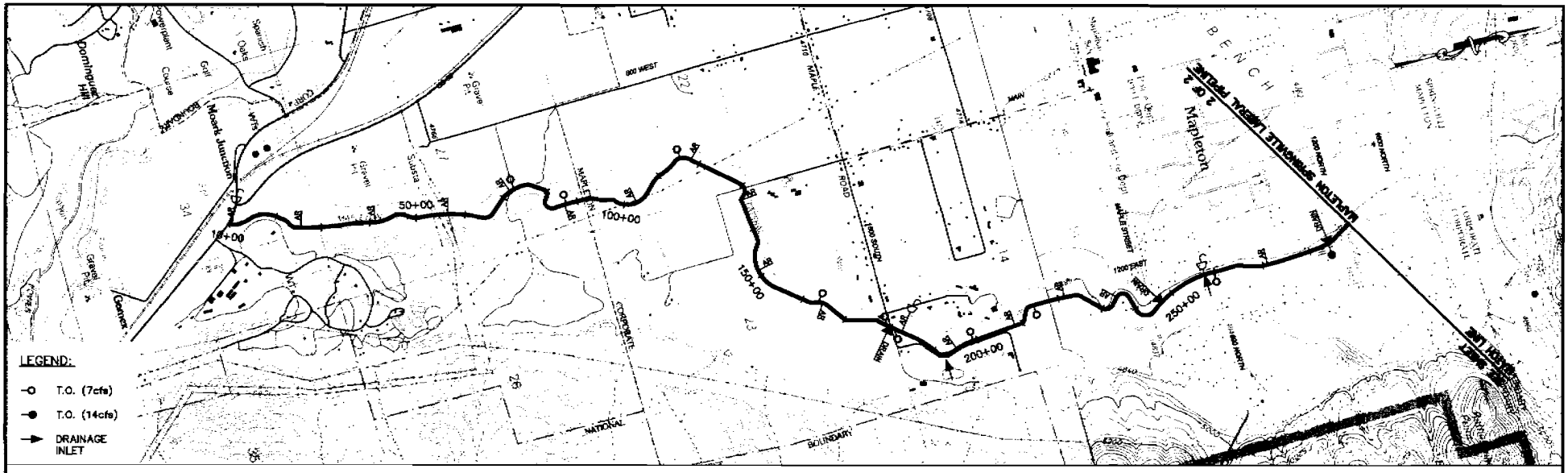

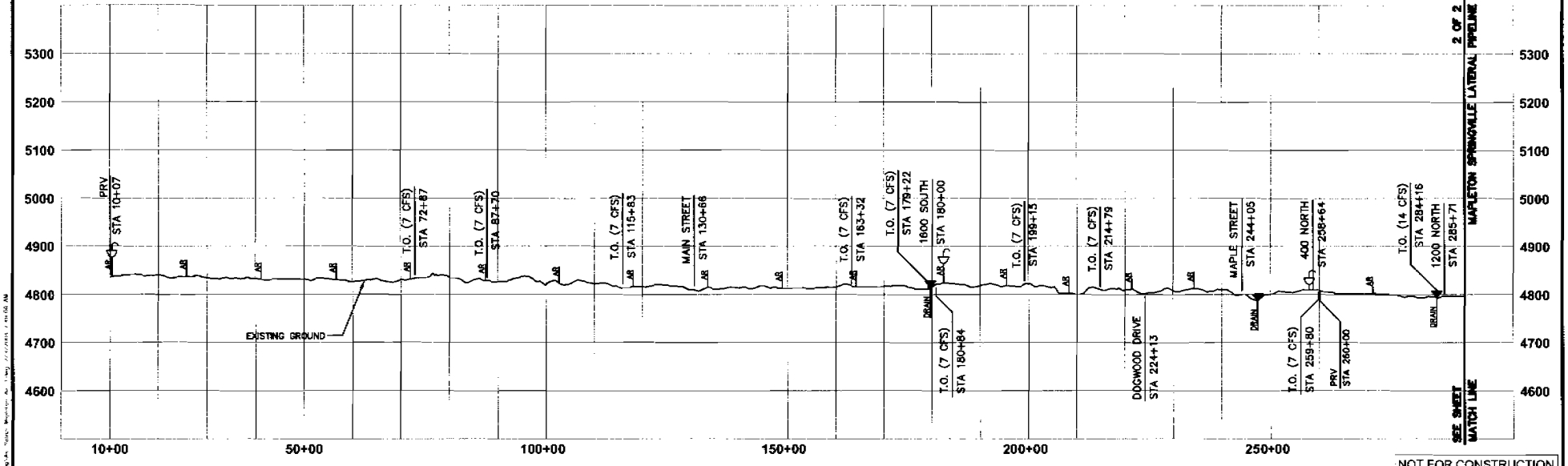

NOT FOR CONSTRUCTION

REV	DATE	BY	DESCRIPTION

SCALE: HORZ: 1" = 1000' VERT. 1" = 100'

WARNING 0 1/2 1 IF THIS BAR DOES NOT MEASURE 1" THEN DRAWING IS NOT TO SCALE.

DESIGNED
DRAWN
CHECKED

SUBMITTED
(PROJECT MANAGER'S NAME) R. C. E. NO. DATE
(COMPANY OFFICER'S NAME) R. C. E. NO. DATE

MWH
MONTGOMERY WATSON HARZA

CENTRAL UTAH WATER CONSERVANCY DISTRICT
AIR RELEASE, VACUUM, and DRAIN VALVES FOR U.I.S PIPELINES – ALTERNATIVES 1,2,3
MAPLETON SPRINGVILLE LATERAL PIPELINE
STA 10+00 TO STA 290+00

PROJECT NO. Y
DATE JANUARY 2004
DRAWING NO. MAPLETON-AIR-1
SHEET NO. 1 of 2

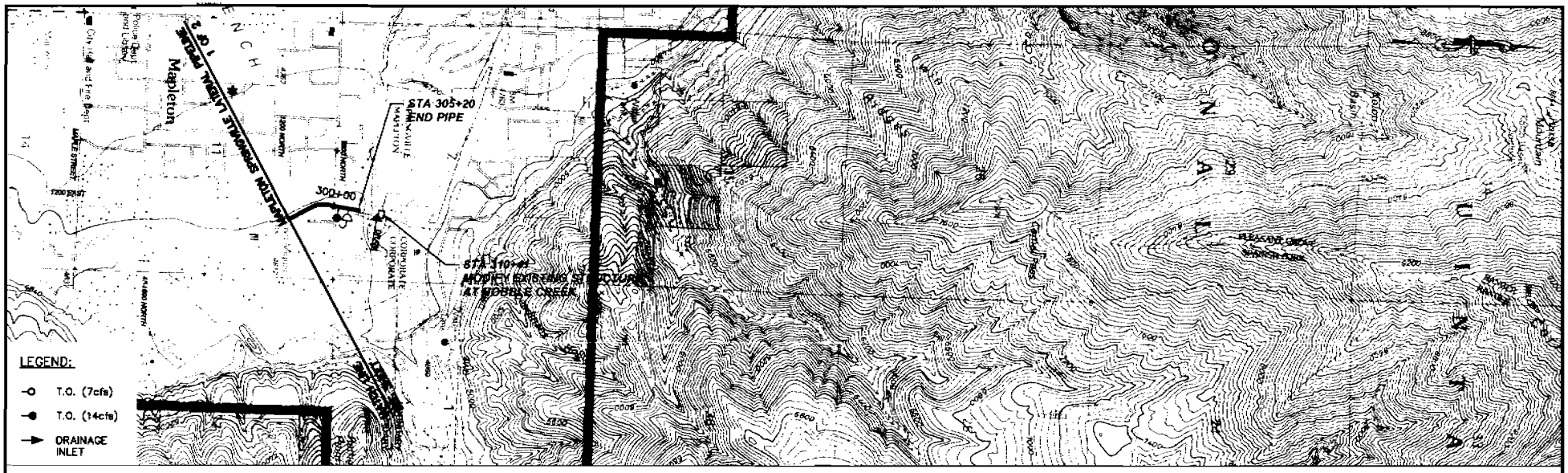

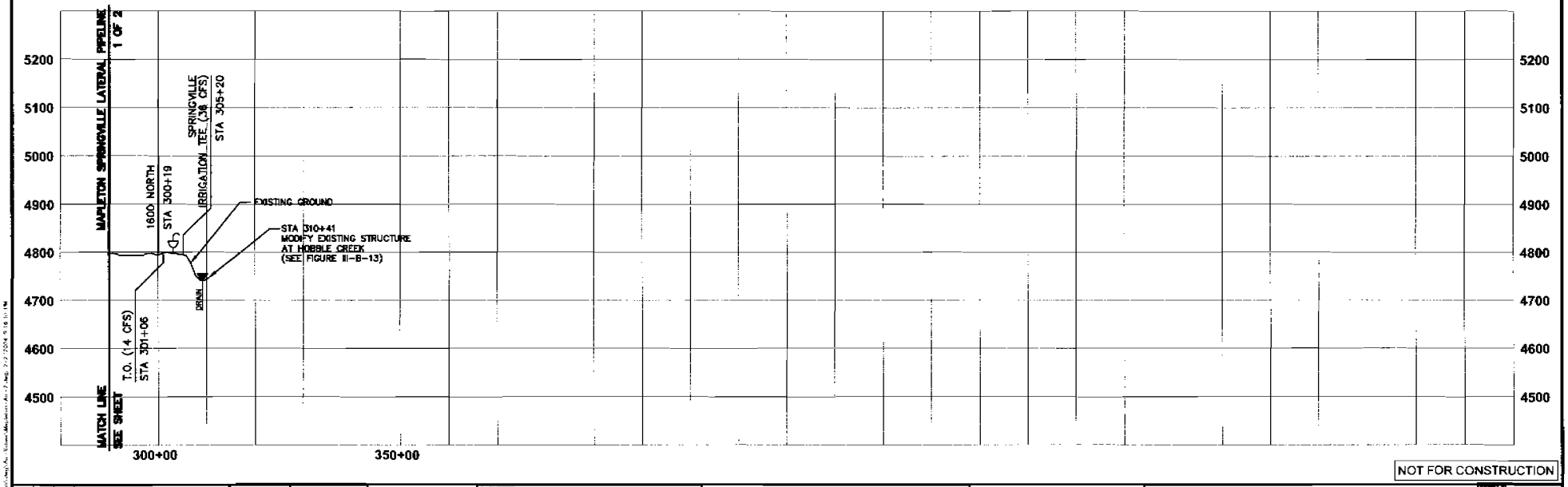

NOT FOR CONSTRUCTION

REV	DATE	BY	DESCRIPTION

SCALE: HORZ: 1" = 1000' VERT. 1" = 100'

WARNING 0 1/2 1 IF THIS BAR DOES NOT MEASURE 1" THEN DRAWING IS NOT TO SCALE.

DESIGNED
DRAWN
CHECKED

SUBMITTED
(PROJECT MANAGER'S NAME) R. C. E. NO. DATE
(COMPANY OFFICER'S NAME) R. C. E. NO. DATE

MWH
MONTGOMERY WATSON HARZA

CUP

CENTRAL UTAH WATER CONSERVANCY DISTRICT
AIR RELEASE, VACUUM, and DRAIN VALVES FOR UBLS PIPELINES - ALTERNATIVES 1,2,3
MAPLETON SPRINGVILLE LATERAL PIPELINE
STA 290+00 TO STA 310+41

CONTRACT NO. X
DATE JANUARY 2004
DRAWING NO. MAPLETON-AIR-2
SHEET NO. 2 of 2

TABLE VIII-25

Mapleton Springville Lateral Pipeline

Station	Air Vacuum Valve		Air Release Valves		Blow-Off Drain Valves	
	Valve Size	Pressure Class	Valve Size	Pressure Class	Valve Size	Pressure Class
10+00	10	150	2	150		
25+50			2	150		
41+00			2	150		
56+50			2	150		
72+00			2	150		
87+00			2	150		
102+50			2	150		
118+00			2	150		
133+50			2	150		
148+50			2	150		
164+00			2	150		
180+00					6	150
182+50	10	150	2	150		
195+00			2	150		
208+00			2	150		
221+00			2	150		
234+00			2	150		
247+00					6	150
257+00	10	150	2	150		
271+00			2	150		
284+00					6	150
303+00	10	150	2	150		
309+00			2	150		

(Alternative 2) Crossing Tables for ULS

Table 8 - 5
Highway and Interstate Pipeline Crossings

Feature Name	Approximate Pipeline Station	Highway or Interstate	Crossing Technique
Spanish Fork – Santaquin Pipeline	13+21	US Highway 89	Jack/bore
Spanish Fork – Santaquin Pipeline	38+00	U.S. Highway 6	Jack/bore
Spanish Fork – Santaquin Pipeline	710+00	U.S. Highway 6/State Route 198	Jack/bore
Spanish Fork – Santaquin Pipeline	742+00	Interstate 15	Jack/bore
Spanish Fork – Santaquin Pipeline	882+00	U.S. Highway 6	Jack/bore
Spanish Fork – Provo Reservoir Canal Pipeline	945+00	U.S. Highway 189	Jack/bore
Spanish Fork – Provo Reservoir Canal Pipeline	1014+00	State Route 52	Jack/bore

Table 8-6
Railroad Crossings

Pipeline	Approximate Pipeline Station	Crossing Technique
Spanish Fork – Santaquin Pipeline	14+00	Jack/bore
Spanish Fork – Santaquin Pipeline	38+00	Jack/bore
Spanish Fork – Santaquin Pipeline	938+00	Jack/bore
Spanish Fork Canyon Pipeline	392+00	Jack/bore

Table 8-7
Stream, River and Canal Pipeline Crossings

Pipeline Name	Approximate Pipeline Station	Water Feature	Crossing Technique
Spanish Fork Canyon Pipeline	131+50	Creek	Jack/bore
Spanish Fork Canyon Pipeline	139+10	Creek	Jack/bore
Spanish Fork Canyon Pipeline	164+40	Creek	Jack/bore
Spanish Fork Canyon Pipeline	188+50	Creek	Jack/bore
Spanish Fork Canyon Pipeline	206+00	Creek	Jack/bore
Spanish Fork Canyon Pipeline	223+00	Creek	Jack/bore
Spanish Fork Canyon Pipeline	265+00	Creek	Jack/bore

(Alternative 2) Crossing Tables for ULS

Table 8-7 Stream, River and Canal Pipeline Crossings			
Pipeline Name	**Approximate Pipeline Station**	**Water Feature**	**Crossing Technique**
Spanish Fork Canyon Pipeline	283+75	Creek	Jack/bore
Spanish Fork Canyon Pipeline	306+70	Creek	Jack/bore
Spanish Fork Canyon Pipeline	325+50	Creek	Jack/bore
Spanish Fork Canyon Pipeline	365+50	Creek	Jack/bore
Spanish Fork Canyon Pipeline	383+97	Creek	Jack/bore
Spanish Fork Canyon Pipeline	422+00	Mapleton Lateral Canal	
Spanish Fork – Santaquin Pipeline	98+00	Mill Race Canal	Jack/bore or Micro-tunnel
Spanish Fork – Santaquin Pipeline	100+00	Spanish Fork River	Jack/bore or Micro-tunnel
Spanish Fork – Santaquin Pipeline	103+00	South Field Canal	Jack/bore
Spanish Fork – Santaquin Pipeline	143+00	Salem Canal	Jack/bore
Spanish Fork – Santaquin Pipeline	242+00	Salem Canal	Jack/bore
Spanish Fork – Santaquin Pipeline	501+00	Strawberry Highline Canal	Jack/bore
Spanish Fork – Santaquin Pipeline	516+00	Strawberry Highline Canal	Jack/bore
Spanish Fork – Santaquin Pipeline	578+00	Irrigation Canal	open cut
Spanish Fork – Santaquin Pipeline	592+00	Irrigation Canal	open cut
Spanish Fork – Santaquin Pipeline	627+00	Irrigation Canal	open cut
Spanish Fork – Santaquin Pipeline	630+00	Strawberry Highline Canal	Jack/bore
Spanish Fork – Santaquin Pipeline	686+00	Irrigation Canal	open cut
Spanish Fork – Santaquin Pipeline	691+00	Spring Creek	Jack/bore
Spanish Fork – Santaquin Pipeline	800+00	Strawberry Highline Canal	Jack/bore
Spanish Fork – Santaquin Pipeline	880+00	drainage channel	open cut
Santaquin – Mona Reservoir Pipeline	344+00	Inlet to Mona Reservoir	Jack/bore
Spanish Fork – Provo Reservoir Canal/Pipeline	313+00	Hobble Creek	Jack/bore
Spanish Fork – Provo Reservoir Canal/Pipeline	357+00	Spring Creek	Jack/bore
Spanish Fork – Provo Reservoir Canal/Pipeline	678+00	Upper Union Canal	Open cut
Spanish Fork – Provo Reservoir	768+00	Rock Canyon	Open cut

(Alternative 2) Crossing Tables for ULS

Table 8-7
Stream, River and Canal Pipeline Crossings

Pipeline Name	Approximate Pipeline Station	Water Feature	Crossing Technique
Canal/Pipeline			
Spanish Fork – Provo Reservoir Canal/Pipeline	941+00	Timpanogos Canal	Jack/bore
Spanish Fork – Provo Reservoir Canal/Pipeline	987+00	Provo River	Micro-tunnel
Spanish Fork – Provo Reservoir Canal/Pipeline	1003+00	Union Canal	Jack/bore
Spanish Fork – Provo Reservoir Canal/Pipeline	1010+00	Bench Canal	Jack/bore
Spanish Fork – Provo Reservoir Canal/Pipeline	1013+00	Provo Reservoir Canal	Jack/bore

TABLE VIII-26
Discharge and Drain Locations for Mapleton-Springville Lateral

Station	Drain Size (inch)	Disturbance area			Length of Road Cut (ft)	Discharge Feature			Discharge (cfs)	Remarks
		Width (ft)	Length (ft)	Area (sf)		Natural Drainage	Storm Drain	Pumped to Surface		
Mapleton-Springville										
180+00	6			0				x	1.0 to 1.5	Discharge to c & g 1600 So.
247+00	6			0				x	1.0 to 1.5	Discharge to c & g Maple Street
284+00	6			0				x	1.0 to 1.5	Discharge to c & g 1200 No.

P:\MWH\Central Utah\wg\Tech Memo 3-B\Sheets\Figures\Fig-3-B-4.dwg, 1/21/2004 3:22:36 PM

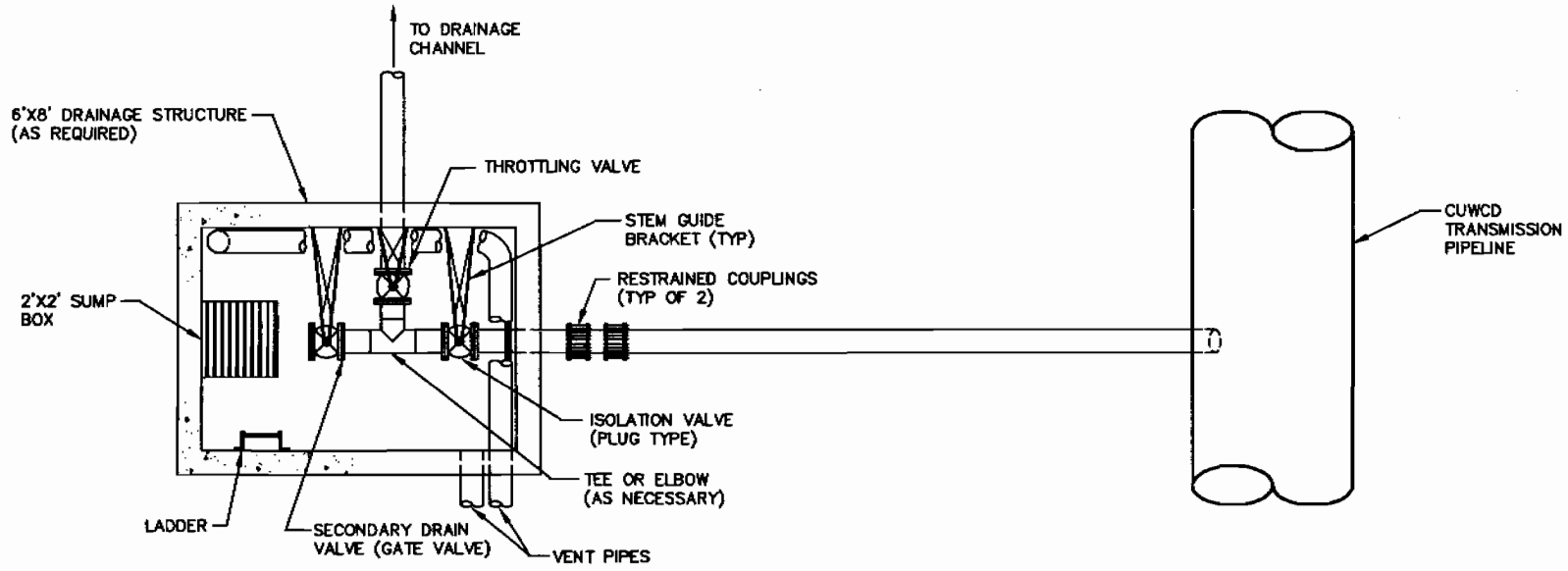

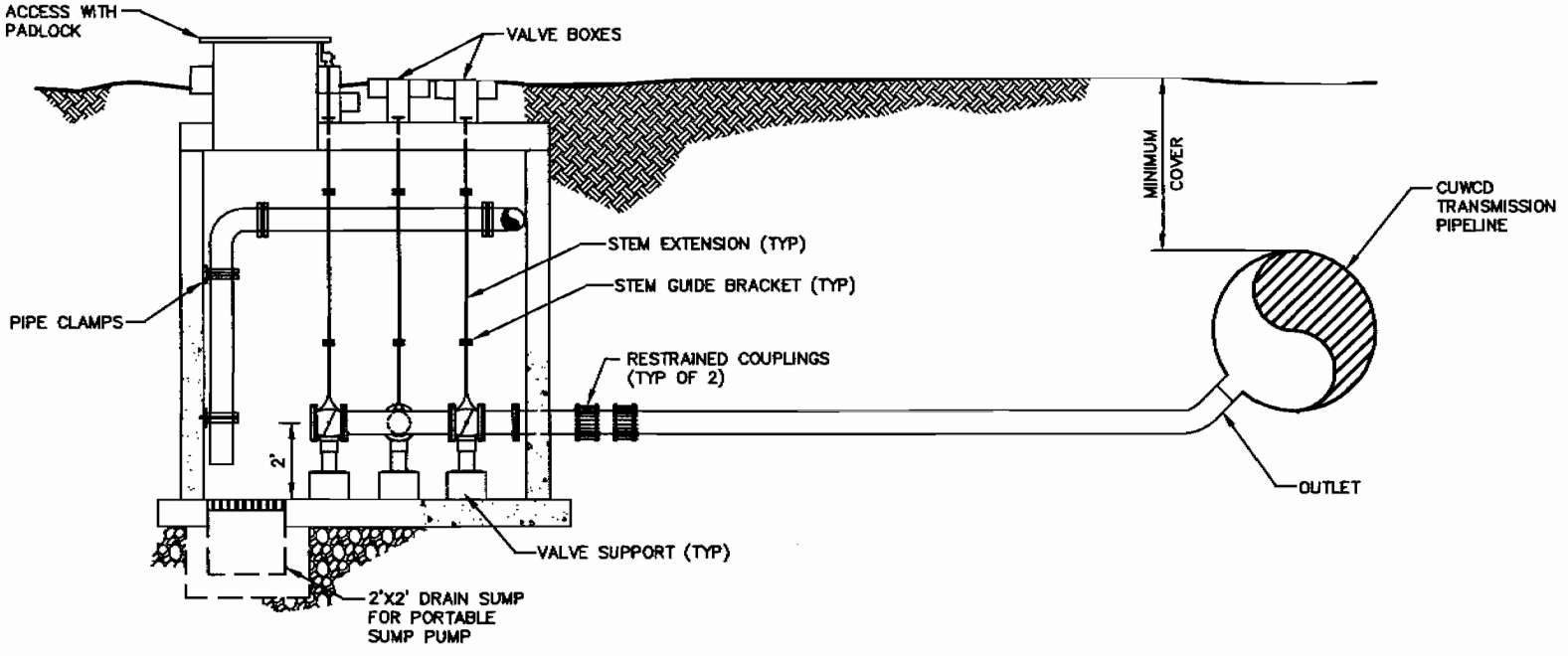

SCALE: N/A

MWH
MONTGOMERY WATSON HARZA

CUP

CENTRAL UTAH WATER CONSERVANCY DISTRICT

TYPICAL DETAIL

BLOW-OFF DRAIN

FIGURE III-B-4

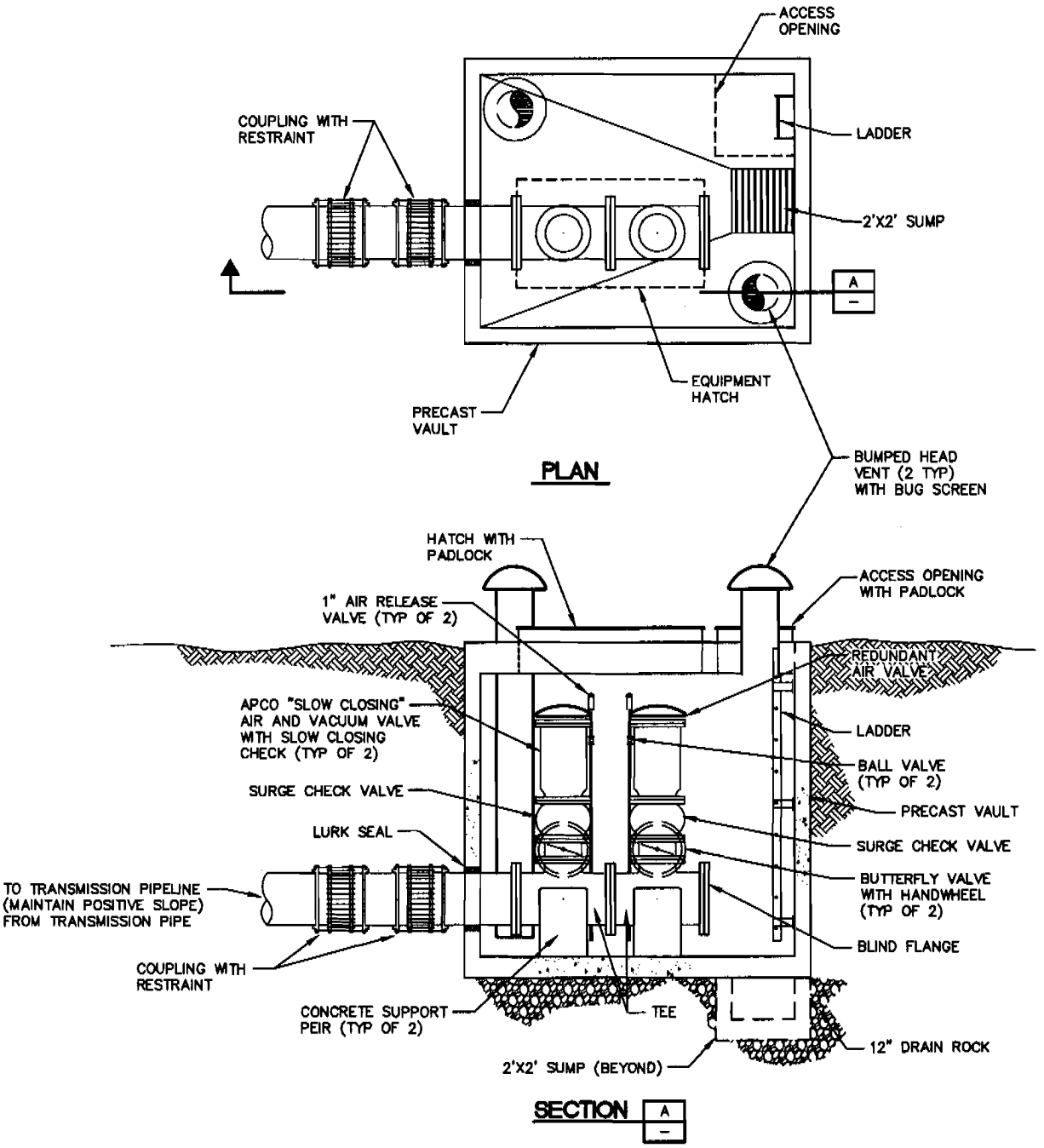

AIR VACUUM/AIR RELEASE VAULT

(6" TO 12" VALVES)

SCALE:			
N/A	MWH MONTGOMERY WATSON HARZA	CUP	CENTRAL UTAH WATER CONSERVANCY DISTRICT TYPICAL DETAIL AIR VACUUM/AIR RELEASE VAULT FIGURE III-B-5

P:\MWH\Central Utah\dwg\Tech Memo 3-B\Sheets\Figures\Fig-3-B-5.dwg, 1/27/2004 9:41:15 PM

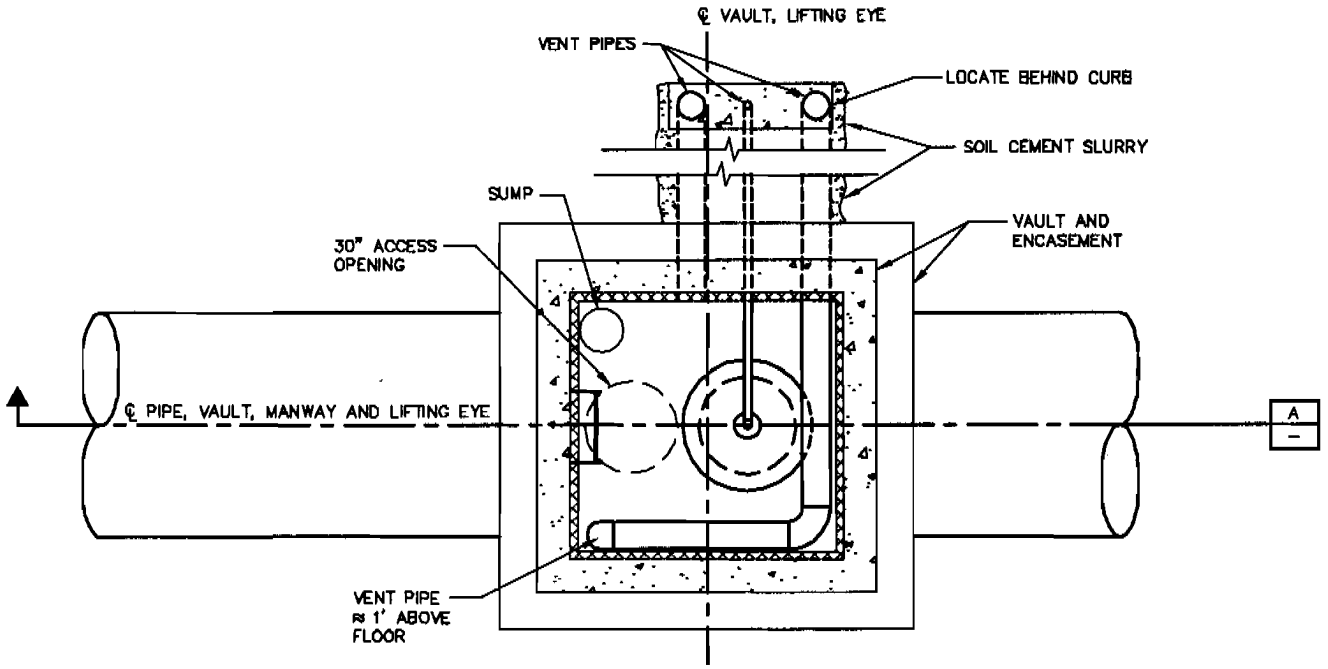

PLAN

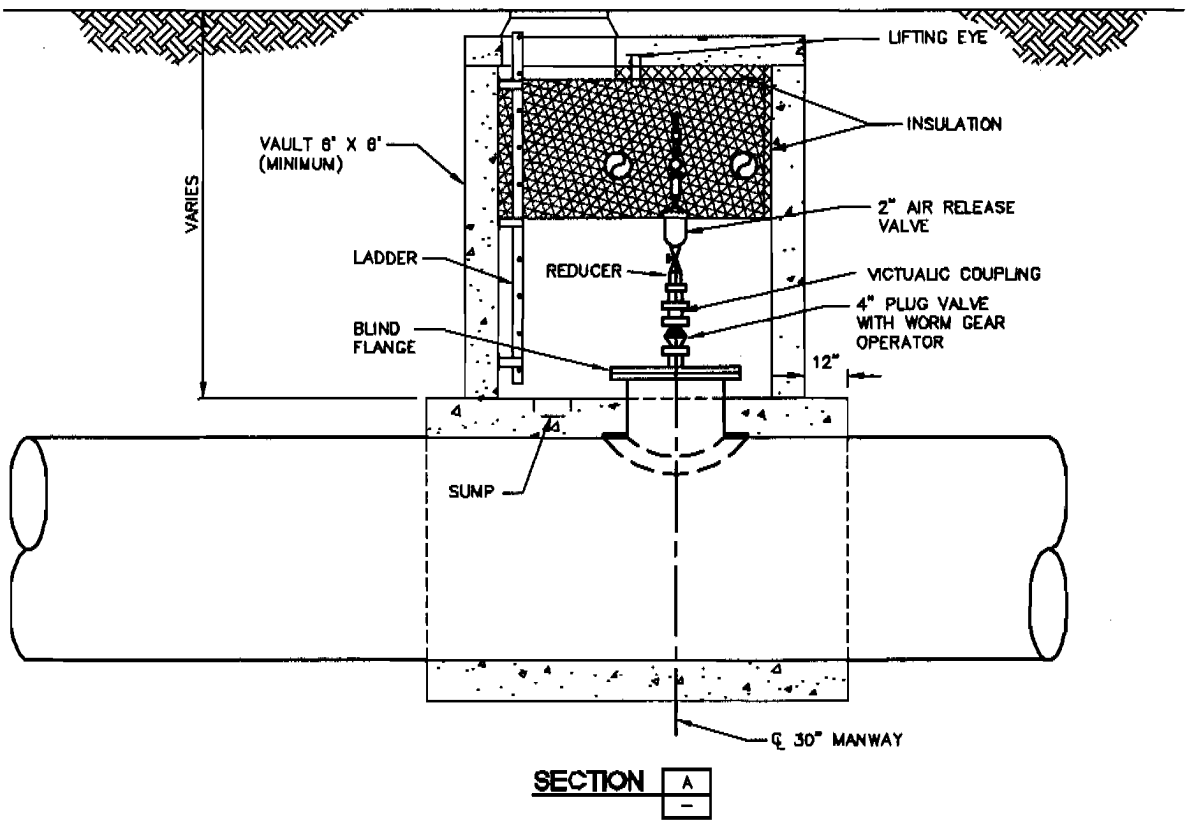

SECTION A

AIR RELEASE VAULT

SCALE:			
N/A	MWH MONTGOMERY WATSON HARZA	CUP	CENTRAL UTAH WATER CONSERVANCY DISTRICT TYPICAL DETAIL AIR RELEASE VAULT FIGURE III-B-6

P:\MWH\Central Utah\dwg\Figures\Fig-3-B-6.dwg, 11/20/2003 11:51:38 AM

P:\MWH\Central Utah\dwg\Tech Memo 3-B\Sheets\Figures\Fig-3-B-15.dwg, 1/21/2004 3:03:05 PM

SCALE: N/A

MWH
MONTGOMERY WATSON HARZA

CUP

CENTRAL UTAH WATER CONSERVANCY DISTRICT

STANDARD DETAIL

TYPICAL TURNOUT WITH METER

FIGURE III-B-15

METER SIZE	VAULT SIZE
12"	6' X 8'
18"	6' X 10'
24"	8' X 10'
30"	8' X 12'
36"	10' X 14'

1. ISOLATION VALVE
2. COUPLING
3. STRAINER
4. METER
5. FLANGE COUPLING ADAPTER
6. ISOLATION VALVE WITH HAND WHEEL
7. PIPE SUPPORT
8. VALVE BOX WITH STEM EXTENSION
9. TELEMETER FLOW TRANSMITTER (AS REQUIRED)

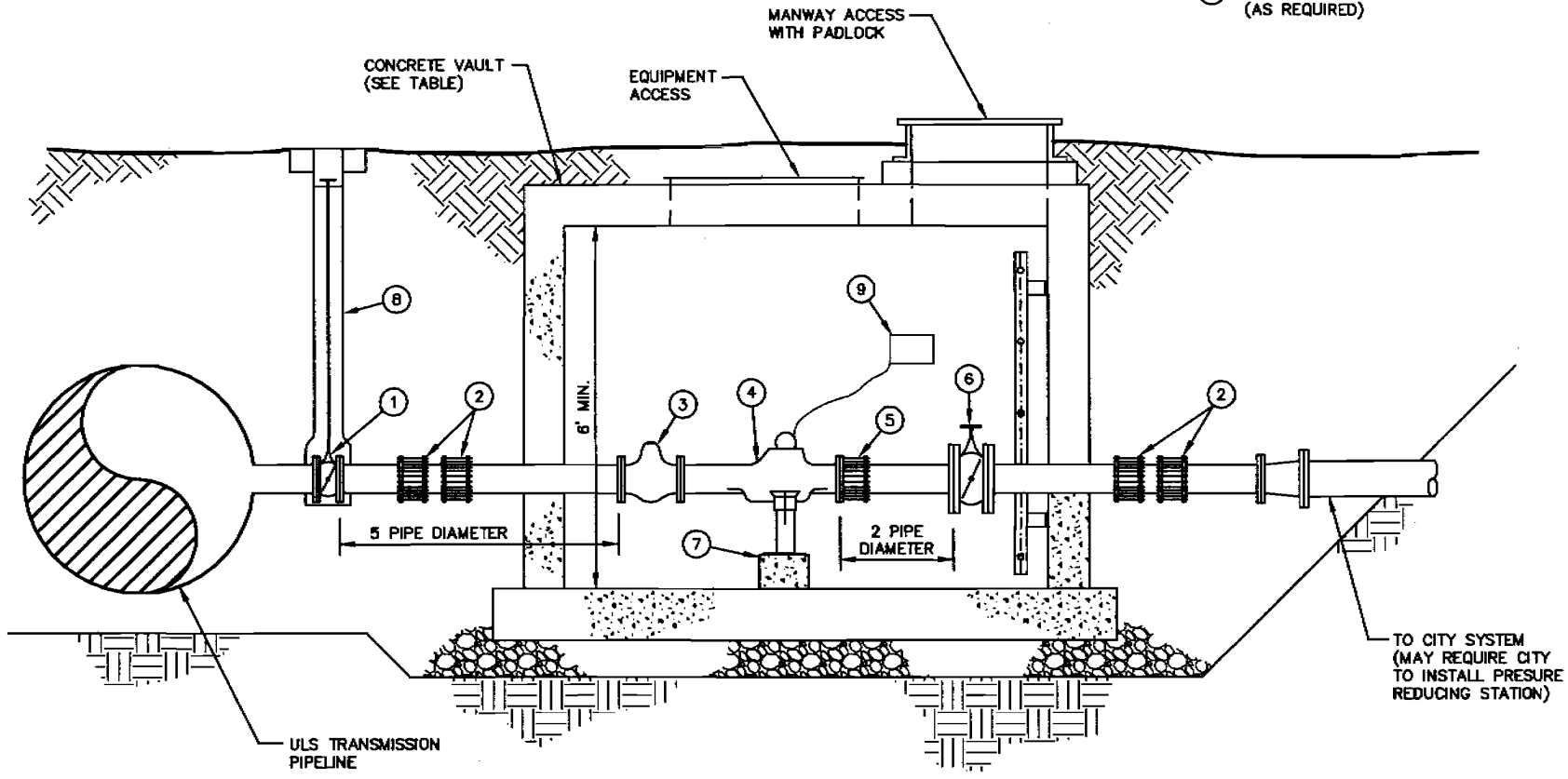

Central Utah Project Completion Program

Sixth Water Power Facility

October 2004

UTAH RECLAMATION
MITIGATION
AND CONSERVATION
COMMISSION

TABLE VIII-7
SUMMARY SHEET
FOR
6TH WATER POWER FACILITY TRANSMISSION LINES

	LABOR	MATERIAL	SUB AMOUNT	EQUIPMENT	OTHER	TOTAL	TOTAL w/Markups*
General Conditions	$841,530	$210,850	$5,390	$45,075	$131,980	$1,234,825	$1,718,100
Building Costs	$0	$0	$0	$0	$0	$0	$0
Site Work	$4,032	$5,600	$850,300	$4,379	$0	$864,311	$1,202,578
Yard Piping	$59,225	$0	$50,500	$129,950	$0	$239,675	$333,477
Transmission (138KV)	$1,277,500	$2,480,000	$15,046,700	$0	$0	$18,804,200	$26,163,631
Substation						$0	$0
Generator (mechanical)						$0	$0
							$29,417,786
Total	$2,182,287	$2,696,450	$15,952,890	$179,404	$131,980	$21,143,011	$29,417,786

* Mark-ups - see Preliminary Design Cost Estimate and Schedule for list of cost markups

Assumptions:

General Conditions - Includes permits, testing and inspection, QA/QC plans, field office equipment and personnel, and mobilization/demobilization

Building - assumes a 50 foot by 70 foot building

Site work - includes rock blasting, excavation, grading, retaining wall, rock dowels, fencing, lighting, gravel parking, etc.

Yard Piping - Assumes minimal yard piping required to connect from existing facilities to generator facility.

Transmission - Assumes 1.5 mile (one circuit) and 14 miles (double circuit) for 138 KV lines

Substation - Assumed three circuit breakers for 138 KV

Generator - assumed standard costs for 46 MW generator.

Spreadsheet Level	Takeoff Quantity	Labor Cost/Unit	Labor Price	Labor Amount	Material Price	Material Amount	Sub Amount	Sub Name	Equip Price	Equip Amount	Other Price	Other Amount	Total Cost/Unit	Total Amount
13000 Sixth Water Power Generation Station														
01 General Conditions				1,391,681		297,035	7,297			70,937		185,267		1,952,217
13 Sixth Water Power Generation Station				2,163,647		3,501,590	21,588,932			211,401				27,465,569
13000 Sixth Water Power Generation Station				*3,555,328*		*3,798,625*	*21,596,229*			*282,337*		*185,267*		*29,417,786*

Partial Totals

Labor	3,555,328		27,763.209	hrs
Material	3,798,625			
Subcontract	21,596,229			
Equipment	282,337		9,608.008	hrs
Other	185,267			
Project Total	**29,417,786**	**29,417,786**		
	Partial Total	***29,417,786***		

Spreadsheet Level	Takoff Quantity	Labor Cost/Unit	Labor Price	Labor Amount	Material Price	Material Amount	Sub Amount	Sub Name	Equip Price	Equip Amount	Other Price	Other Amount	Total Cost/Unit	Total Amount
13000 Sixth Water Power Generation Station														
01 General Conditions														
1050.100 Permits														
Construction Permits	1.00 ls	-	-	-	/ls		-		-	-	85,000.00 /ls	**85,000**	85,000.00 /ls	85,000
Electric Permits	1.00 ls	-	-	-	28,228.15 /ls	28,228	-		-	-	-	-	28,228.15 /ls	28,228
Fire Alarm Hook up Permit	1.00 ls	-	-	-	2,786.82 /ls	2,787	-		-	-	-	-	2,786.82 /ls	2,787
Permits		*/ls*				*31,015*						*85,000*	*/ls*	*116,015*
1060.100 Documents														
As Built Prints & Records	1.00 ls	-	-	-	2,000.00 /ls	2,000	-		-	-	-	-	2,000.00 /ls	2,000
QA/QC Plan	1.00 ls	11,250.00 /ls	11,250.00 /ls	11,250	2,500.00 /ls	2,500	-		-	-	-	-	13,750.00 /ls	13,750
Documents		*/ls*		*11,250*		*4,500*							*/ls*	*15,750*
1065.100 Start-Up & Commissioning														
Survey & Layouts	1.00 ls	42,000.00 /ls	42,000.00 /ls	42,000	5,000.00 /ls	5,000	-		12,000.00 /ls	12,000	-	-	59,000.00 /ls	59,000
Start-Up & Commissioning		*/ls*		*42,000*		*5,000*				*12,000*			*/ls*	*59,000*
1070.100 Photos														
Project Photos	18.00 mo	450.00 /mo	450.00 /mo	8,100	150.00 /mo	2,700	-		-	-	-	-	600.00 /mo	10,800
Photos		*/mo*		*8,100*		*2,700*							*/mo*	*10,800*
1075.100 Signs														
Project Signs 4x8	1.00 ea	150.00 /ea	150.00 /mh	150	250.00 /ea	250	-		-	-	-	-	400.00 /ea	400
Signs		*/ea*		*150*		*250*							*/ea*	*400*
1100.100 Project Management														
Construction Manager	24.00 wk	2,400.00 /wk	2,400.00 /wk	57,600	-	-	-		100.00 /wk	2,400	-	-	2,500.00 /wk	60,000
Project Engineer	78.00 wk	1,500.00 /wk	1,500.00 /wk	117,000	-	-	-		100.00 /wk	7,800	-	-	1,600.00 /wk	124,800
Purchasing Agent	9.00 wk	2,100.00 /wk	2,100.00 /wk	18,900	-	-	-		75.00 /wk	675	-	-	2,175.00 /wk	19,575
Scheduling Engineer	20.00 wk	1,600.00 /wk	1,600.00 /wk	32,000	-	-	-		75.00 /wk	1,500	-	-	1,675.00 /wk	33,500
Project Management		*/wk*		*225,500*						*12,375*			*/wk*	*237,875*
1102.100 Site Supervision														
General Superintendent	78.00 wk	2,100.00 /wk	2,100.00 /wk	163,800	-	-	-		/wk		-	-	2,100.00 /wk	163,800
Electrical Superintendent	31.20 wk	2,100.00 /wk	2,100.00 /wk	65,520	-	-	-		/wk		-	-	2,100.00 /wk	65,520
Site Supervision		*/wk*		*229,320*									*/wk*	*229,320*
1104.100 Field Foreman														
Electrical Working Foreman	52.00 wk	700.00 /wk	700.00 /wk	36,400	-	-	-		-	-	-	-	700.00 /wk	36,400
Field Foremen		*/wk*		*36,400*									*/wk*	*36,400*
1106.100 Clerical Staff														
Project Secretary	78.00 wk	1,400.00 /wk	1,400.00 /wk	109,200	-	-	-		-	-	-	-	1,400.00 /wk	109,200
Time Keeper	78.00 wk	480.00 /wk	480.00 /wk	37,440	-	-	-		-	-	-	-	480.00 /wk	37,440
Clerical Staff		*/wk*		*146,640*									*/wk*	*146,640*
1110.100 Travel														
Weekly Auto Allowance	250.00 wk	-	-	-	75.00 /wk	18,750	-		-	-	-	-	75.00 /wk	18,750
Travel		*/wk*				*18,750*							*/wk*	*18,750*
1200.100 Security														
Watchman	78.00 wk	1,200.00 /wk	1,200.00 /wk	93,600	-	-	2,730		-	-	-	-	1,235.00 /wk	96,330
Security		*/ls*		*93,600*			*2,730*						*/ls*	*96,330*
1250.100 Offices														
Office Trailer	18.00 mo	-	-	-	-	-	-		1,150.00 /mo	20,700	-	-	1,150.00 /mo	20,700
Offices		*/ls*								*20,700*			*/ls*	*20,700*
1255.100 Supplies & Equip														

Spreadsheet Level	Takeoff Quantity	Labor Cost/Unit	Labor Price	Labor Amount	Material Price	Material Amount	Sub Amount	Sub Name	Equip Price	Equip Amount	Other Price	Other Amount	Total Cost/Unit	Total Amount
1255.100 Supplies & Equip														
Copy Machine	18.00 mo	-	-	-	550.00 /mo	9,900	-		-	-	-	-	550.00 /mo	9,900
Personal Computer	54.00 mo	-	-	-	200.00 /mo	10,800	-		-	-	-	-	200.00 /mo	10,800
Software Licenses	54.00 mo	-	-	-	75.00 /mo	4,050	-		-	-	-	-	75.00 /mo	4,050
Desks & Chairs	54.00 mo	-	-	-	5.00 /mo	270	-		-	-	-	-	5.00 /mo	270
File Cabinets	18.00 mo	-	-	-	5.00 /mo	90	-		-	-	-	-	5.00 /mo	90
Postage & Courier Services	18.00 mo	-	-	-	200.00 /mo	3,600	-		-	-	-	-	200.00 /mo	3,600
Fax Machine & Line	18.00 mo	-	-	-	150.00 /mo	2,700	-		-	-	-	-	150.00 /mo	2,700
Office Supplies & Equipment	18.00 mo	-	-	-	150.00 /mo	2,700	-		-	-	-	-	150.00 /mo	2,700
Water, Ice, & Cups	18.00 Mo	-	-	-	-	-	-		-	-	110.00 /Mo	1,980	110.00 /Mo	1,980
Supplies & Equip		*/s*				*34,110*						*1,980*	*/s*	*36,090*
1260.100 Utilities														
Electric Power	18.00 mo	-	-	-	700.00 /mo	12,600	-		-	-	-	-	700.00 /mo	12,600
Telephone Charges	18.00 mo	-	-	-	750.00 /mo	13,500	-		-	-	-	-	750.00 /mo	13,500
Temporary Toilets	18.00 mo	-	-	-	150.00 /mo	2,700	-		-	-	-	-	150.00 /mo	2,700
Utilities		*/s*				*28,800*							*/s*	*28,800*
1270.100 OSHA & Safety														
Safety Officer	18.00 wk	1,500.00 /wk	20.00 /mh	24,000	-	-	-		-	-	-	-	1,500.00 /wk	24,000
Safety Meeting Time	52.00 mh	10.00 /mh	10.00 /mh	520	-	-	-		-	-	-	-	10.00 /mh	520
Miscellaneous Safety	1.00 ls	500.00 /ls	500.00 /ls	500	500.00 /ls	500	-		-	-	-	-	1,000.00 /ls	1,000
First Aid	1.00 ls		/ls		60,000.00 /ls	60,000	-		/ls		-	-	60,000.00 /ls	60,000
OSHA & Safety		*/s*		*25,020*		*60,500*							*/s*	*85,520*
1274.100 Fire Protection														
Fire Extinguishers	3.00 ea	10.00 /ea	10.00 /mh	30	25.00 /ea	75	-		-	-	-	-	35.00 /ea	105
Fire Protection		*/sf*		*30*		*75*							*/sf*	*105*
1300.100 Allowances														
Weekly Cleaning	78.00 wk	150.00 /wk	150.00 /wk	11,700	50.00 /wk	3,900	-		-	-	-	-	200.00 /wk	15,600
Final Cleaning	1.00 ls	2,000.00 /ls	2,000.00 /ls	2,000	1,000.00 /ls	1,000	-		-	-	-	-	3,000.00 /ls	3,000
Allowances		*/s*		*13,700*		*4,900*							*/s*	*18,600*
1350.100 Tools & Equipment														
Misc Tools Weekly	78.00 wk	-	-	-	250.00 /wk	19,500	-		-	-	-	-	250.00 /wk	19,500
Tools & Equipment		*/s*				*19,500*							*/s*	*19,500*
1370.100 Scheduling														
Scheduling Expense	1.00 ls	1,500.00 /ls	1,500.00 /ls	1,500	750.00 /ls	750	-		-	-	-	-	2,250.00 /ls	2,250
Scheduling		*/s*		*1,500*		*750*							*/s*	*2,250*
1380.100 Punch List														
Punch List by MH	416.00 mh	20.00 /mh	20.00 /mh	8,320	-	-	-		-	-	-	-	20.00 /mh	8,320
Punch List		*/s*		*8,320*									*/s*	*8,320*
1460.100 Testing														
Misc Test & Inspection	18.00 mo	-	-	-	-	-			-	-	2,500.00 /mo	45,000	2,500.00 /mo	45,000
Testing		*/s*										*45,000*	*/s*	*45,000*
1630.100 Mobilization / Demobiliza														
Mobilization / Demobilization	14.00 ea		/ea		-	-	2,660		/ea		-	-	190.00 /ea	2,660
Mobilization / Demobiliza		*/s*					*2,660*						*/s*	*2,660*
01 General Conditions				**841,530**		**210,850**	**5,390**			**45,075**		**131,980**		**1,234,825**
13 Sixth Water Power Generation Station														
2110.210 Sitework Sub														
Additional Civil/Structural/Building Work Package	1.00 ls	-	-	-	-	-	310,000		-	-	-	-	310,000.00 /ls	310,000

Spreadsheet Level	Takeoff Quantity	Labor Cost/Unit	Labor Price/Unit	Labor Amount	Material Price	Material Amount	Sub Amount	Sub Name	Equip Price	Equip Amount	Other Price	Other Amount	Total Cost/Unit	Total Amount
Sitework Sub		/ls					*310,000*						/ls	*310,000*
2310.120 Grading- Fine														
Fine Grade Building	1.00 ls		/cd		-	-	10,000		/cd		-	-	10,000.00 /ls	10,000
Grading- Fine		/sf					*10,000*						/sf	*10,000*
2316.150 Rock Excavation														
Rock Excavation, Hydraulic Hoe Ram -Medium	9,000.00 cy		/cd		-	-	135,000		/cy		-	-	15.00 /cy	135,000
Rock Excavation		/cy					*135,000*						/cy	*135,000*
2316.155 Rock Blasting														
Rock Blasting-Trench	1,200.00 sy						36,000				/sy		30.00 /sy	36,000
Rock Blasting		/cy					*36,000*						/cy	*36,000*
2316.202 Pipe Excavation														
Excavate Silt-Clay, Loam, Hydraulic Hoe	3,000.00 cy		/cd		-	-	15,000		/cy		-	-	5.00 /cy	15,000
Backfill and Compact, Machine	500.00 cy		/cd		-	-	2,500		/cy		-	-	5.00 /cy	2,500
Excess Material, 70 Mile Round Trip Haul, Offsite	11,500.00 cy	5.15 /cy	649.92 /cd	59,225	-	-	-		11.30 /cy	129,950	-	-	16.45 /cy	189,175
Pipe Excavation		/cy		*59,225*			*17,500*			*129,950*			/cy	*206,675*
2511.101 DI Push On Pipe														
Yard Piping	55.00 lf		/ch		/lf		33,000		-	-	-	-	600.00 /lf	33,000
DI Push On Pipe		/lf					*33,000*						/lf	*33,000*
2740.120 Asphalt Paving - SY														
Gravel Surface	1,120.00 sy	3.60 /sy	3.60 /sy	4,032	5.00 /sy	5,600			3.91 /sy	4,379	-	-	12.51 /sy	14,011
Asphalt Paving - SY		/sy		*4,032*		*5,600*				*4,379*			/sy	*14,011*
2820.008 Chain Link Fence- 8'														
8' Chain Link Fence	600.00 lf	-	-	-	-	-	16,800		-	-	-	-	28.00 /lf	16,800
Chain Link Fence- 8'		/ea					*16,800*						/ea	*16,800*
2945.100 Site Landscaped Walls														
Retaining Wall	2,000.00 sf		12.08 /ch		/sf		80,000		/ch		-	-	40.00 /sf	80,000
Site Landscaped Walls		/sf					*80,000*						/sf	*80,000*
2950.000 SITE RESTORATION														
Landscaping	1.00 ls		/ls		/ls		10,000		/ls		-	-	10,000.00 /ls	10,000
SITE RESTORATION		/msf					*10,000*						/msf	*10,000*
3000.990 Conc Subs- Concrete														
Shotcrete	200.00 cy	-	-	-	-	-	130,000		-	-	-	-	650.00 /cy	130,000
Conc Subs- Concrete		/ls					*130,000*						/ls	*130,000*
3150.710 Set Steel in Concrete														
Drill & Set Rock Dowels	4,500.00 lf		/mh		/lf		112,500		-	-	-	-	25.00 /lf	112,500
Set Steel in Concrete		/ls					*112,500*						/ls	*112,500*
16000.001 Electrical Sub														
138 kV Transmission Line (One Circuit)	1.50 mil	45,000.00 /mil	45,000.00 /mil	67,500	100,000.00 /mil	150,000			-	-	-	-	145,000.00 /mil	217,500
138 kV Transmission Line (Double Circuit)	14.00 mil	65,000.00 /mil	65,000.00 /mil	910,000	120,000.00 /mil	1,680,000			-	-	-	-	185,000.00 /mil	2,590,000
138 kV Sub, 138 kV Circuit Breakers	3.00 ea	60,000.00 /ea	60,000.00 /ea	180,000	70,000.00 /ea	210,000			-	-	-	-	130,000.00 /ea	390,000
138 kV Sub, 9 CCVT's	1.00 lot	72,000.00 /lot	72,000.00 /lot	72,000	150,000.00 /lot	150,000			-	-	-	-	222,000.00 /lot	222,000
Relay Panel	1.00 ea	5,000.00 /ea	5,000.00 /ea	5,000	40,000.00 /ea	40,000			-	-	-	-	45,000.00 /ea	45,000

Spreadsheet Level	Takeoff Quantity	Labor Cost/Unit	Labor Price	Labor Amount	Material Price	Material Amount	Sub Amount	Sub Markup	Equip Price	Equip Amount	Other Price	Other Amount	Total Cost/Unit	Total Amount
16000.001 Electrical Sub														
Communications Panel	1.00 ea	8,000.00 /ea	8,000.00 /ea	8,000	50,000.00 /ea	50,000			-	-	-	-	58,000.00 /ea	58,000
Enclosures, Grounding, Upgrading Relays	1.00 lot	35,000.00 /lot	35,000.00 /lot	35,000	200,000.00 /lot	200,000			-	-	-	-	235,000.00 /lot	235,000
Water to Wire	1.00 ls	-	-	-	-	-	########		-	-	-	-	15,046,700.00 /ls	15,046,700
Electrical/Mechanical Equipment Package														
Electrical Sub		*/sf*		*1,277,500*		*2,480,000*	*15,046,700*						*/sf*	*18,804,200*
16521.300 Mercury Vapor Comm Surf														
Site Lighting	1.00 ls		/mh		/ls		10,000		-	-	-	-	10,000.00 /ls	10,000
Mercury Vapor Comm Surf		*/ea*					*10,000*						*/ea*	*10,000*
13 Sixth Water Power Generation Station				**1,340,757**		**2,485,600**	**15,947,500**			**134,329**				**19,908,186**
13000 Sixth Water Power Generation Station				***2,182,287***		***2,696,450***	***15,952,890***			***179,404***		***131,980***		***21,143,011***

Partial Totals

Labor	2,182,287		27,763.209	hrs
Material	2,696,450			
Subcontract	15,952,890			
Equipment	179,404		9,608.008	hrs
Other	131,980			
	21,143,011	21,143,011		
GC's Labor Burden	269,290		32.000 %	C
Trade Labor Burden	375,412		28.000 %	C
Total w/Labor Burden	**644,702**	21,787,713		
Material Sales Tax	202,234		7.500 %	C
Subcontractor Bond	319,058		2.000 %	C
Equipment Fuel & Maintenance	43,057		24.000 %	C
Other Mark-up	9,239		7.000 %	C
Total Construction Value	**573,588**	22,361,301		
Profit	2,185,741		7.430 %	T
Contingency	4,472,260		20.000 %	T
Total Project w/o Ins/Bonds	**6,658,001**	29,019,302		
Builder's Risk Insurance	91,489		0.311 %	T
General Liability Insurance	147,089		0.500 %	T
Performance & Payment Bond	159,906			B
Project Total	**398,484**	29,417,786		
	Partial Total	***29,417,786***		

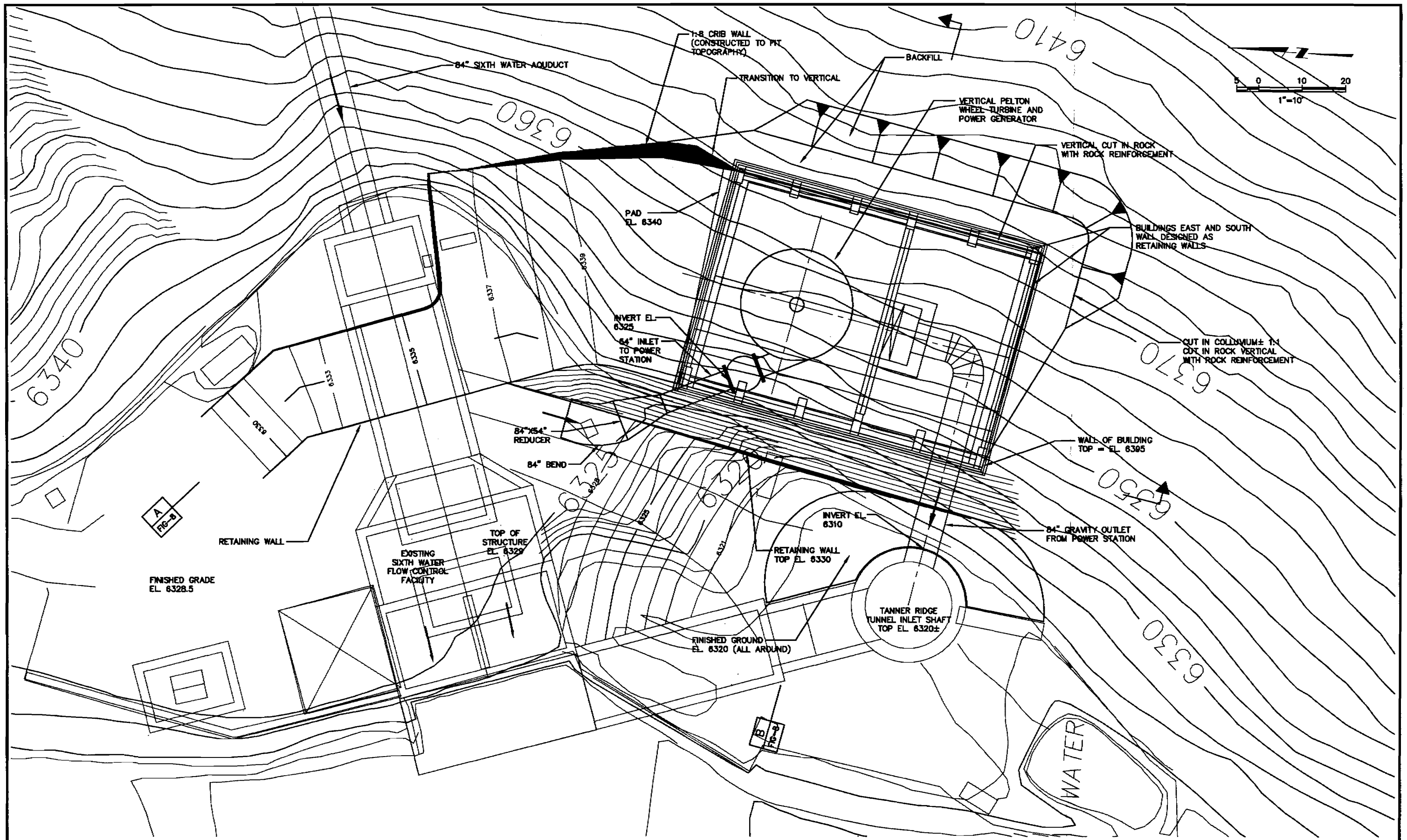

NOT FOR CONSTRUCTION

REV	DATE	BY	DESCRIPTION

SCALE: H: 1" = 10'

WARNING 0 1/2 1 IF THIS BAR DOES NOT MEASURE 1" THEN DRAWING IS NOT TO SCALE.

DESIGNED
DRAWN
CHECKED

SUBMITTED
(PROJECT MANAGER'S NAME) R. C. E. NO. DATE
(COMPANY OFFICER'S NAME) R. C. E. NO. DATE

MWH
MONTGOMERY WATSON HARZA

CUP

CENTRAL UTAH WATER CONSERVANCY DISTRICT
SPANISH FORK CANYON – PROVO RESERVOIR PIPELINE ALTERNATIVE
SIXTH WATER POWER FACILITY – SITE PLAN
FIGURE V-B-12

CONTRACT NO. X
DATE FEBRUARY 2004
DRAWING NO. FIGURE V-B-12
SHEET NO. 1 of 3

P:\MWH\Central Utah\Dwg\Tech Memo 3-C\Sheets\Power Stations\Figure V-B-12.dwg, 2/17/2004 10:18:01 PM

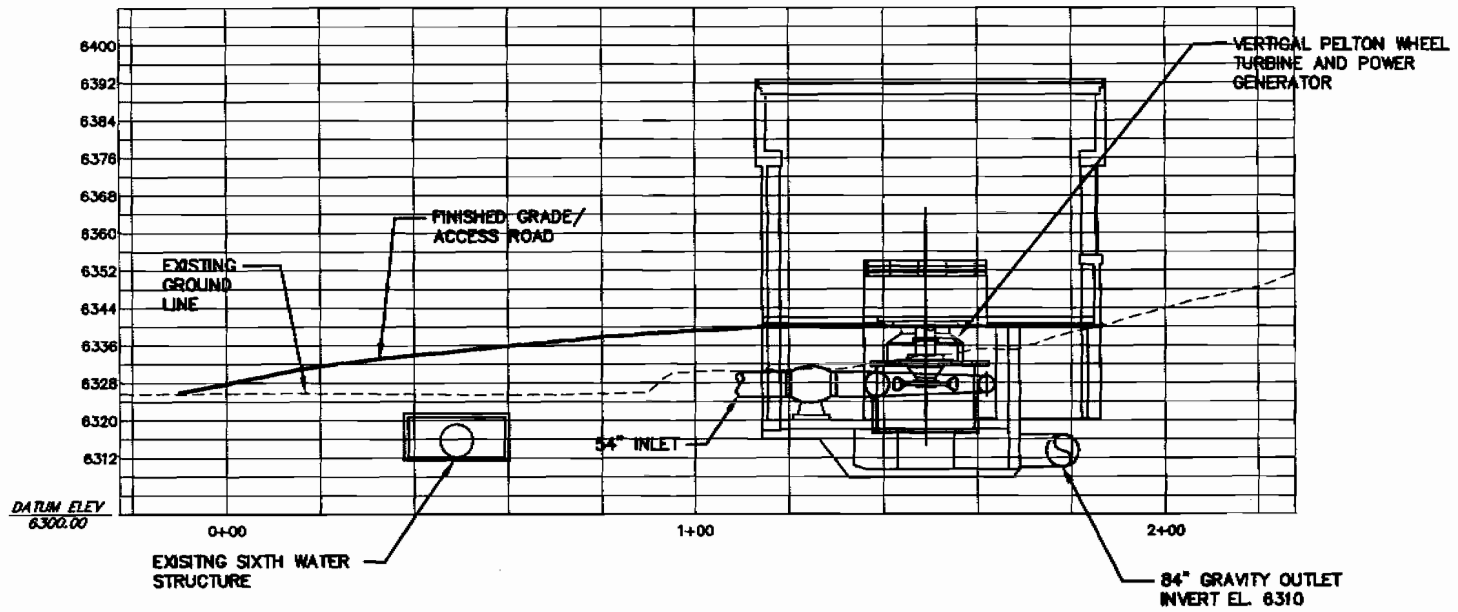

A FIG-7 SECTION

NOTE: ROCK IS MODERATELY WEATHERED, HORIZONTALLY LAYERED SHALE INTERBEDDED WITH SANDSTONE AND LIMESTONE

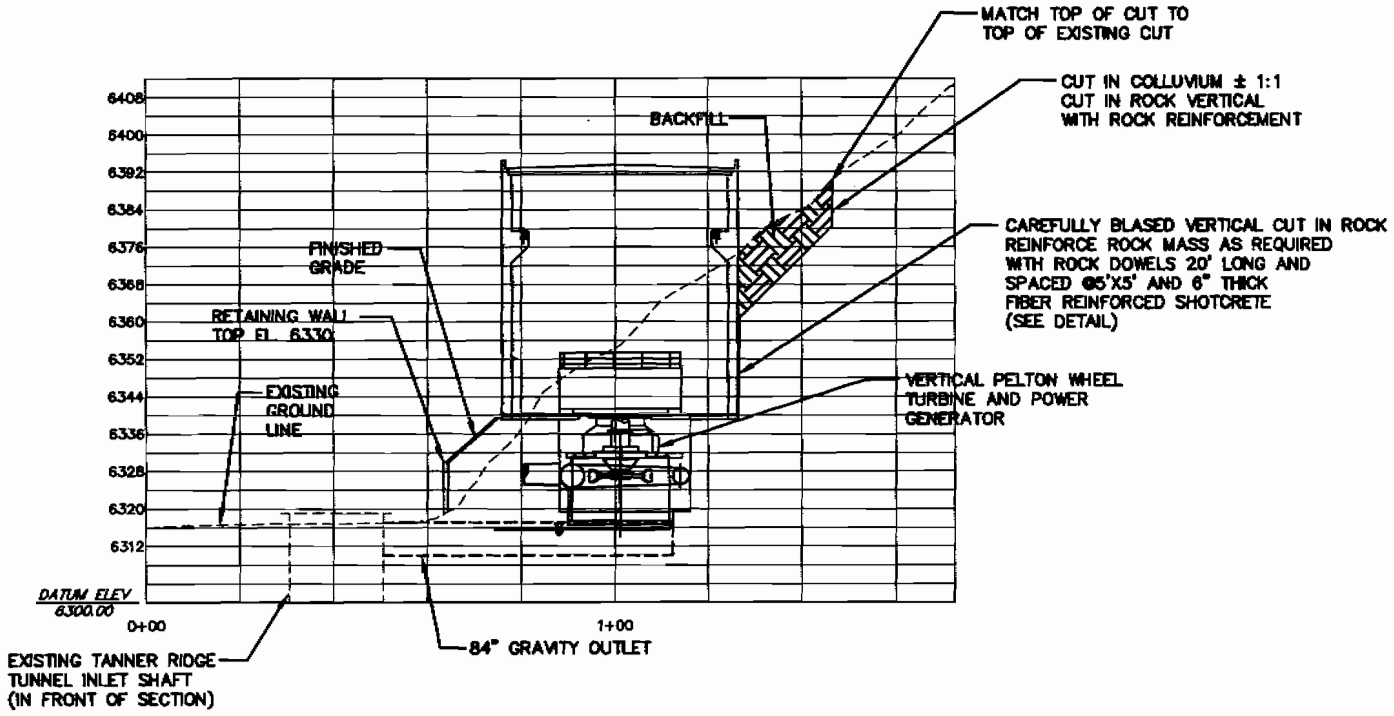

B FIG-7 SECTION

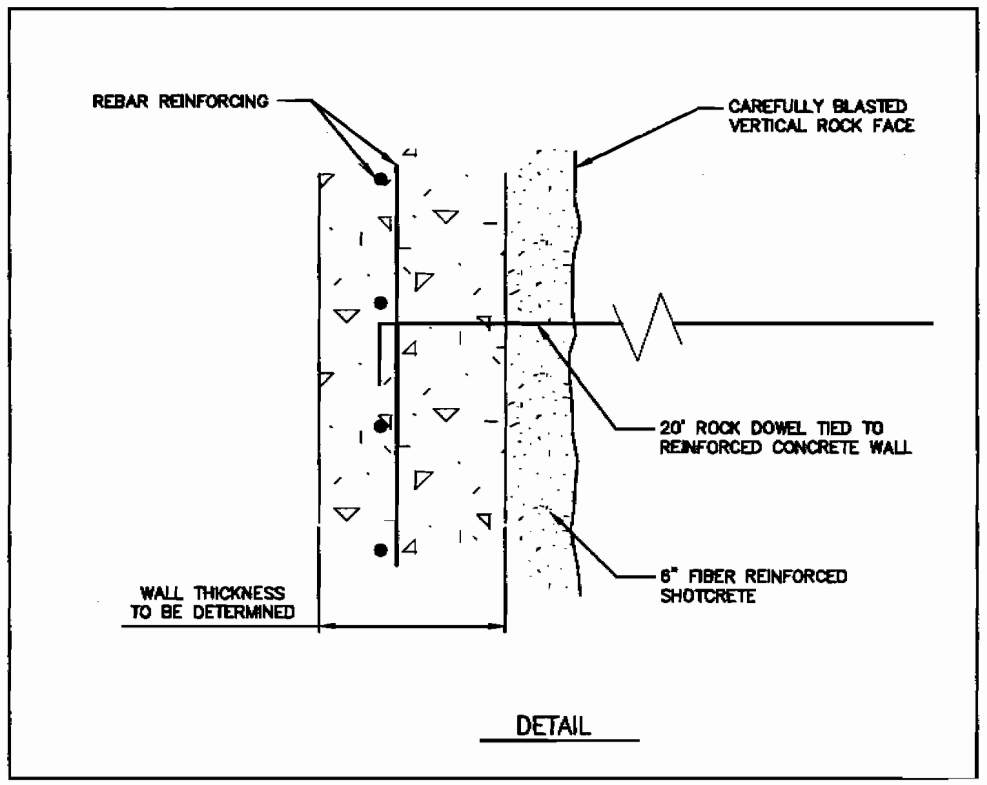

DETAIL

NOT FOR CONSTRUCTION

REV	DATE	BY	DESCRIPTION

SCALE: H: 1" = 20' V: 1" = 20'

WARNING 0 1/2 1 IF THIS BAR DOES NOT MEASURE 1" THEN DRAWING IS NOT TO SCALE.

DESIGNED
DRAWN
CHECKED

SUBMITTED
(PROJECT MANAGER'S NAME) R. C. E. NO. DATE
(COMPANY OFFICER'S NAME) R. C. E. NO. DATE

MWH
MONTGOMERY WATSON HARZA

CUP

CENTRAL UTAH WATER CONSERVANCY DISTRICT
SPANISH FORK CANYON – PROVO RESERVOIR PIPELINE ALTERNATIVE
SIXTH WATER POWER FACILITY – CROSS SECTIONS
FIGURE V-B-13

CONTRACT NO. X
DATE FEBRUARY 2004
DRAWING NO. FIGURE V-B-13
SHEET NO. 2 of 3

P:\MWH\Central Utah\Eng\Tech Memo 3-C\Sheets\Power Stations\Figure V B-13.dwg, 2/17/2004 10:20:21 PM

Central Utah Project Completion Program

Upper Diamond Power Facility

October 2004

UTAH RECLAMATION
MITIGATION
AND CONSERVATION
COMMISSION

TABLE VIII-8
SUMMARY SHEET
FOR
UPPER DIAMOND POWER FACILITY

	LABOR	MATERIAL	SUB AMOUNT	EQUIPMENT	OTHER	TOTAL	TOTAL w/Markups*
General Conditions	$318,320	$96,925	$4,025	$19,700	$39,490	$478,460	$663,166
Building Costs	$0	$0	$0	$0	$0	$0	$0
Site Work	$648	$900	$329,200	$704	$0	$331,452	$459,407
Yard Piping	$38,625	$0	$57,500	$84,750	$0	$180,875	$250,701
Generator (mechanical)	$0	$0	$3,271,000	$0	$0	$3,271,000	$4,533,747
Total	**$357,593**	**$97,825**	**$3,661,725**	**$105,154**	**$39,490**	**$4,261,787**	**$5,907,020**

* Mark-ups - see Preliminary Design Cost Estimate and Schedule for list of cost markups

Assumptions:

General Conditions - Includes permits, testing and inspection, QA/QC plans, field office equipment and personnel, and mobilization/demobilization

Building - assumes a 35 foot by 50 foot building

Site work - includes rock blasting, excavation, grading, retaining wall, rock dowels, fencing, lighting, gravel parking, etc.

Yard Piping - Assumes minimal yard piping required to connect from existing facilities to generator facility.

Transmission - Assumed existing line in tunnel will be utilized

Generator - assumed standard costs for 5 MW generator.

Spreadsheet Level	Takeoff Quantity	Labor Cost/Unit	Labor Price	Labor Amount	Material Price	Material Amount	Sub Amount	Sub Markup	Equip Price	Equip Amount	Other Price	Other Amount	Total Cost/Unit	Total Amount
14000 Upper Diamond Fork Power Generation Station														
01 General Conditions				526,528		136,575	5,450			31,010		55,447		755,011
14 Upper Diamond Power Generation Station				63,390		1,268	4,952,840			134,512				5,152,009
14000 Upper Diamond Fork Power Generation Station				*589,918*		*137,844*	*4,958,290*			*165,521*		*55,447*		*5,907,020*

Partial Totals

Labor	589,918		11,202.779	hrs
Material	137,844			
Subcontract	4,958,290			
Equipment	165,521		3,600.008	hrs
Other	55,447			
Project Total	5,907,020	5,907,020		
	Partial Total	***5,907,020***		

Spreadsheet Level	Takeoff Quantity	Labor Cost/Unit	Labor Price	Labor Amount	Material Price	Material Amount	Sub Amount	Sub Name	Equip Price	Equip Amount	Other Price	Other Amount	Total Cost/Unit	Total Amount
14000 Upper Diamond Fork Power Generation Station														
01 General Conditions														
1050.100 Permits														
Construction Permits	1.00 ls	-	-	-	/ls		-		-	-	25,000.00 / s	25,000	25,000.00 /ls	25,000
Electric Permits	1.00 ls	-	-	-	28,228.18 /ls	28,228	-		-	-	-	-	28,228.18 /ls	28,228
Fire Alarm Hook up Permit	1.00 ls	-	-	-	2,786.82 /ls	2,787	-		-	-	-	-	2,786.82 /ls	2,787
Permits		*/ls*				*31,015*						*25,000*	*/ls*	*56,015*
1060.100 Documents														
As Buil't Prints & Records	1.00 ls	-	-	-	2,000.00 /ls	2,000	-		-	-	-	-	2,000.00 /ls	2,000
QA/QC Plan	1.00 ls	6,000.00 /ls	6,000.00 /ls	6,000	1,000.00 /ls	1,000	-		-	-	-	-	7,000.00 /ls	7,000
Documents		*/ls*		*6,000*		*3,000*							*/ls*	*9,000*
1065.100 Start-Up & Commissioning														
Survey & Layouts	1.00 ls	20,000.00 /ls	20,000.00 /ls	20,000	2,500.00 /ls	2,500	-		6,000.00 /ls	6,000	-	-	28,500.00 /ls	28,500
Start-Up & Commissioning		*/ls*		*20,000*		*2,500*				*6,000*			*/ls*	*28,500*
1070.100 Photos														
Project Photos	9.00 mo	450.00 /mo	450.00 /mo	4,050	150.00 /mo	1,350	-		-	-	-	-	600.00 /mo	5,400
Photos		*/mo*		*4,050*		*1,350*							*/mo*	*5,400*
1075.100 Signs														
Project Signs 4x8	1.00 ea	150.00 /ea	150.00 /mh	150	250.00 /ea	250	-		-	-	-	-	400.00 /ea	400
Signs		*/ea*		*150*		*250*							*/ea*	*400*
1100.100 Project Management														
Construction Manager	8.00 wk	2,400.00 /wk	2,400.00 /wk	19,200	-	-	-		100.00 /wk	800	-	-	2,500.00 /wk	20,000
Project Engineer	18.00 wk	1,500.00 /wk	1,500.00 /wk	27,000	-	-	-		100.00 /wk	1,800	-	-	1,600.00 /wk	28,800
Purchasing Agent	5.00 wk	2,100.00 /wk	2,100.00 /wk	10,500	-	-	-		75.00 /wk	375	-	-	2,175.00 /wk	10,875
Scheduling Engineer	5.00 wk	1,600.00 /wk	1,600.00 /wk	8,000	-	-	-		75.00 /wk	375	-	-	1,675.00 /wk	8,375
Project Management		*/wk*		*64,700*						*3,350*			*/wk*	*68,050*
1102.100 Site Supervision														
General Superintendent	39.00 wk	2,100.00 /wk	2,100.00 /wk	81,900	-	-	-		/wk		-	-	2,100.00 /wk	81,900
Electrical Superintendent	15.00 wk	2,100.00 /wk	2,100.00 /wk	31,500	-	-	-		/wk		-	-	2,100.00 /wk	31,500
Site Supervision		*/wk*		*113,400*									*/wk*	*113,400*
1104.100 Field Foreman														
Electrical Working Foreman	26.00 wk	700.00 /wk	700.00 /wk	18,200	-	-	-		-	-	-	-	700.00 /wk	18,200
Field Foreman		*/wk*		*18,200*									*/wk*	*18,200*
1105.100 Clerical Staff														
Time Keeper	39.00 wk	480.00 /wk	480.00 /wk	18,720	-	-	-		-	-	-	-	480.00 /wk	18,720
Clerical Staff		*/wk*		*18,720*									*/wk*	*18,720*
1110.100 Travel														
Weekly Auto Allowance	78.00 wk	-	-	-	75.00 /wk	5,850	-		-	-	-	-	75.00 /wk	5,850
Travel		*/wk*				*5,850*							*/wk*	*5,850*
1200.100 Security														
Watchman	39.00 wk	1,200.00 /wk	1,200.00 /wk	46,800	-	-	1,365		-	-	-	-	1,235.00 /wk	48,165
Security		*/ls*		*46,800*			*1,365*						*/ls*	*48,165*
1250.100 Offices														
Office Trailer	9.00 mo	-	-	-	-	-	-		1,150.00 /mo	10,350	-	-	1,150.00 /mo	10,350

Spreadsheet Level	Takeoff Quantity	Labor Cost/Unit	Labor Price	Labor Amount	Material Price	Material Amount	Sub Amount	Sub Name	Equip Price	Equip Amount	Other Price	Other Amount	Total Cost/Unit	Total Amount
Offices		/ls								10,350			/ls	10,350
1255.100 Supplies & Equip														
Copy Machine	9.00 mo	-	-	-	550.00 /mo	4,950	-		-	-	-	-	550.00 /mo	4,950
Personal Computer	18.00 mo	-	-	-	200.00 /mo	3,600	-		-	-	-	-	200.00 /mo	3,600
Software Licenses	18.00 mo	-	-	-	75.00 /mo	1,350	-		-	-	-	-	75.00 /mo	1,350
Desks & Chairs	18.00 mo	-	-	-	5.00 /mo	90	-		-	-	-	-	5.00 /mo	90
File Cabinets	9.00 mo	-	-	-	5.00 /mo	45	-		-	-	-	-	5.00 /mo	45
Postage & Courier Services	9.00 mo	-	-	-	200.00 /mo	1,800	-		-	-	-	-	200.00 /mo	1,800
Fax Machine & Line	9.00 mo	-	-	-	150.00 /mo	1,350	-		-	-	-	-	150.00 /mo	1,350
Office Supplies & Equipment	9.00 mo	-	-	-	150.00 /mo	1,350	-		-	-	-	-	150.00 /mo	1,350
Water, Ice, & Cups	9.00 Mo	-	-	-	-	-	-		-	-	110.00 /Mo	990	110.00 /Mo	990
Supplies & Equip		/ls				14,535						990	/ls	15,525
1260.100 Utilities														
Electric Power	9.00 mo	-	-	-	700.00 /mo	6,300	-		-	-	-	-	700.00 /mo	6,300
Telephone Charges	9.00 mo	-	-	-	750.00 /mo	6,750	-		-	-	-	-	750.00 /mo	6,750
Temporary Toilets	9.00 mo	-	-	-	150.00 /mo	1,350	-		-	-	-	-	150.00 /mo	1,350
Utilities		/ls				14,400							/ls	14,400
1270.100 OSHA & Safety														
Safety Officer	8.00 wk	1,500.00 /wk	20.00 /mh	12,000	-	-	-		-	-	-	-	1,500.00 /wk	12,000
Safety Meeting Time	26.00 mh	10.00 /mh	10.00 /mh	260	-	-	-		-	-	-	-	10.00 /mh	260
Miscellaneous Safety	1.00 ls	500.00 /ls	500.00 /ls	500	500.00 /ls	500	-		-	-	-	-	1,000.00 /ls	1,000
First Aid	1.00 ls		/ls		10,000.00 /ls	10,000	-		/ls		-	-	10,000.00 /ls	10,000
OSHA & Safety		/ls		12,760		10,500							/ls	23,260
1274.100 Fire Protection														
Fire Extinguishers	3.00 ea	10.00 /ea	10.00 /mh	30	25.00 /ea	75	-		-	-	-	-	35.00 /ea	105
Fire Protection		/sf		30		75							/sf	105
1300.100 Allowances														
Weekly Cleaning	39.00 wk	150.00 /wk	150.00 /wk	5,850	50.00 /wk	1,950	-		-	-	-	-	200.00 /wk	7,800
Final Cleaning	1.00 ls	2,000.00 /ls	2,000.00 /ls	2,000	1,000.00 /ls	1,000	-		-	-	-	-	3,000.00 /ls	3,000
Allowances		/ls		7,850		2,950							/ls	10,800
1350.100 Tools & Equipment														
Misc Tools Weekly	39.00 wk	-	-	-	250.00 /wk	9,750	-		-	-	-	-	250.00 /wk	9,750
Tools & Equipment		/ls				9,750							/ls	9,750
1370.100 Scheduling														
Scheduling Expense	1.00 ls	1,500.00 /ls	1,500.00 /ls	1,500	750.00 /ls	750	-		-	-	-	-	2,250.00 /ls	2,250
Scheduling		/ls		1,500		750							/ls	2,250
1380.100 Punch List														
Punch List by MH	208.00 mh	20.00 /mh	20.00 /mh	4,160	-	-	-		-	-	-	-	20.00 /mh	4,160
Punch List		/ls		4,160									/ls	4,160
1460.100 Testing														
Misc Test & Inspection	9.00 mo	-	-	-	-	-			-	-	1,500.00 /mo	13,500	1,500.00 /mo	13,500
Testing		/ls										13,500	/ls	13,500
1630.100 Mobilization / Demobiliza														
Mobilization / Demobilization	14.00 ea		/ea		-	-	2,660		/ea		-	-	190.00 /ea	2,660

Spreadsheet Level	Takeoff Quantity	Labor Cost/Unit	Labor Price	Labor Amount	Material Price	Material Amount	Sub Amount	Sub Name	Equip Price	Equip Amount	Other Price	Other Amount	Total Cost/Unit	Total Amount
Mobilization / Demobiliza		*/ls*					2,660						*/ls*	*2,660*
01 General Conditions				**318,320**		**95,925**	**4,025**			**19,700**		**39,490**		**478,460**
14 Upper Diamond Power Generation Station														
2110.210 Sitework Sub														
Additional Civil/Structural/Building Work Package	1.00 ls	-	-	-	-	-	186,000		-	-	-	-	186,000.00 /ls	186,000
Sitework Sub		*/ls*					*186,000*						*/ls*	*186,000*
2310.120 Grading- Fine														
Fine Grade Building	1.00 ls		/cd		-	-	10,000		/cd		-	-	10,000.00 /ls	10,000
Grading- Fine		*/sf*					*10,000*						*/sf*	*10,000*
2316.150 Rock Excavation														
Rock Excavation, Hydraulic Hoe Ram -Medium	3,000.00 cy		/cd		-	-	45,000		/cy		-	-	15.00 /cy	45,000
Rock Excavation		*/cy*					*45,000*						*/cy*	*45,000*
2316.155 Rock Blasting														
Rock Blasting-Trench	150.00 sy	-	-	-	-	-	4,500		-	-	/sy		30.00 /sy	4,500
Rock Blasting		*/cy*					*4,500*						*/cy*	*4,500*
2316.202 Pipe Excavation														
Excavate Silt-Clay, Loam, Hydraulic Hoe	5,000.00 cy		/cd		-	-	25,000		/cy		-	-	5.00 /cy	25,000
Backfill and Compact, Machine	500.00 cy		/cd		-	-	2,500		/cy		-	-	5.00 /cy	2,500
Excess Material, 60 Mile Round Trip Haul, Offsite	7,500.00 cy	5.15 /cy	649.92 /cd	38,625	-	-			11.30 /cy	84,750	-	-	16.45 /cy	123,375
Pipe Excavation		*/cy*		*38,625*			*27,500*			*84,750*			*/cy*	*150,875*
2511.101 Dl Push On Pipe														
Yard Piping	50.00 lf		/ch		/lf		30,000		-	-	-	-	600.00 /lf	30,000
Dl Push On Pipe		*/lf*					*30,000*						*/lf*	*30,000*
2740.120 Asphalt Paving - SY														
Gravel Surface	180.00 sy	3.60 /sy	3.60 /sy	648	5.00 /sy	900			3.91 /sy	704	-	-	12.51 /sy	2,252
Asphalt Paving - SY		*/sy*		*648*		*900*				*704*			*/sy*	*2,252*
2820.008 Chain Link Fence- 8'														
8' Chain Link Fence	400.00 lf	-	-	-	-	-	11,200		-	-	-	-	28.00 /lf	11,200
Chain Link Fence- 8'		*/ea*					*11,200*						*/ea*	*11,200*
2945.100 Site Landscaped Walls														
Crib Wall	1,750.00 sf		12.08 /ch		/sf		52,500		/ch		-	-	30.00 /sf	52,500
Site Landscaped Walls		*/sf*					*52,500*						*/sf*	*52,500*
2950.000 SITE RESTORATION														
Landscaping	1.00 ls		/ls		/ls		10,000		/ls		-	-	10,000.00 /ls	10,000
SITE RESTORATION		*/msf*					*10,000*						*/msf*	*10,000*
16000.001 Electrical Sub														
Water to Wire Electrical/Mechanical Equipment Package	1.00 ls	-	-	-	-	-	3,271,000		-	-	-	-	3,271,000.00 /ls	3,271,000

Spreadsheet Level	Takeoff Quantity	Labor Cost/Unit	Labor Price	Labor Amount	Material Price	Material Amount	Sub Amount	Sub Name	Equip Price	Equip Amount	Other Price	Other Amount	Total Cost/Unit	Total Amount
Electrical Sub		/sf					*3,271,000*						/sf	*3,271,000*
16521.300 Mercury Vapor Comm Surf														
Site Lighting	1.00 ls		/mh		/ls		10,000		-	-	-	-	10,000.00 /ls	10,000
Mercury Vapor Comm Surf		/ea					*10,000*						/ea	*10,000*
14 Upper Diamond Power Generation Station				**39,273**		**900**	**3,657,700**			**85,454**				**3,783,327**
14000 Upper Diamond Fork Power Generation Station				***357,593***		***97,825***	***3,661,725***			***105,154***		***39,490***		***4,261,787***

Partial Totals

Labor	357,593		11,202.779	hrs	
Material	97,825				
Subcontract	3,661,725				
Equipment	105,154		3,600.008	hrs	
Other	39,490				
	4,261,787	4,261,787			
GC's Labor Burden	101,862		32.000 %		C
Trade Labor Burden	10,996		28.000 %		C
Total w/Labor Burden	**112,858**	**4,374,645**			
Material Sales Tax	7,337		7.500 %		C
Subcontractor Bond	73,235		2.000 %		C
Equipment Fuel & Maintenance	25,237		24.000 %		C
Other Mark-up	2,764		7.000 %		C
Total Construction Value	**108,573**	**4,483,218**			
Profit	438,892		7.430 %		T
Contingency	896,644		20.000 %		T
Total Project w/o Ins/Bonds	**1,335,536**	**5,818,754**			
Builder's Risk Insurance	18,371		0.311 %		T
General Liability Insurance	29,535		0.500 %		T
Performance & Payment Bond	40,360				B
Project Total	**88,266**	**5,907,020**			
	Partial Total	***5,907,020***			

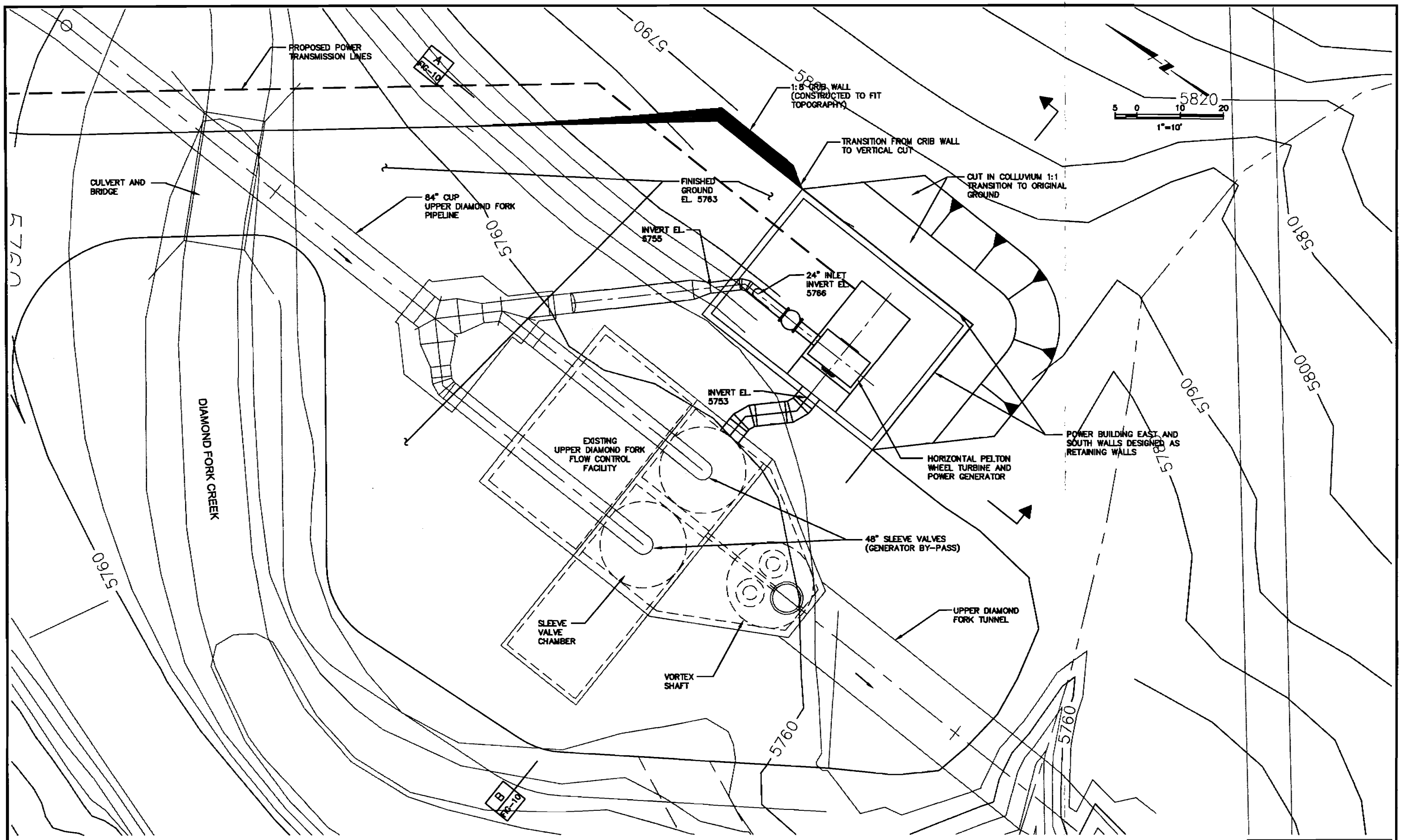

NOT FOR CONSTRUCTION

REV	DATE	BY	DESCRIPTION

SCALE: H: 1" = 10'

WARNING 0 1/2 1 IF THIS BAR DOES NOT MEASURE 1" THEN DRAWING IS NOT TO SCALE.

DESIGNED
DRAWN
CHECKED

SUBMITTED
(PROJECT MANAGER'S NAME) R. C. E. NO. DATE
(COMPANY OFFICER'S NAME) R. C. E. NO. DATE

MWH
MONTGOMERY WATSON HARZA

CENTRAL UTAH WATER CONSERVANCY DISTRICT
SPANISH FORK CANYON – PROVO RESERVOIR PIPELINE ALTERNATIVE
UPPER DIAMOND POWER FACILITY – SITE PLAN
FIGURE V-B-15

CONTRACT NO. X
DATE FEBRUARY 2004
DRAWING NO. FIGURE V-B-15
SHEET NO. 1 of 3

P:\MWH\Central Utah\dwg\Tech Memo 3-C\Sheets\Power Stations\Figure V-B-15.dwg, 2/17/2004 10:21:56 PM

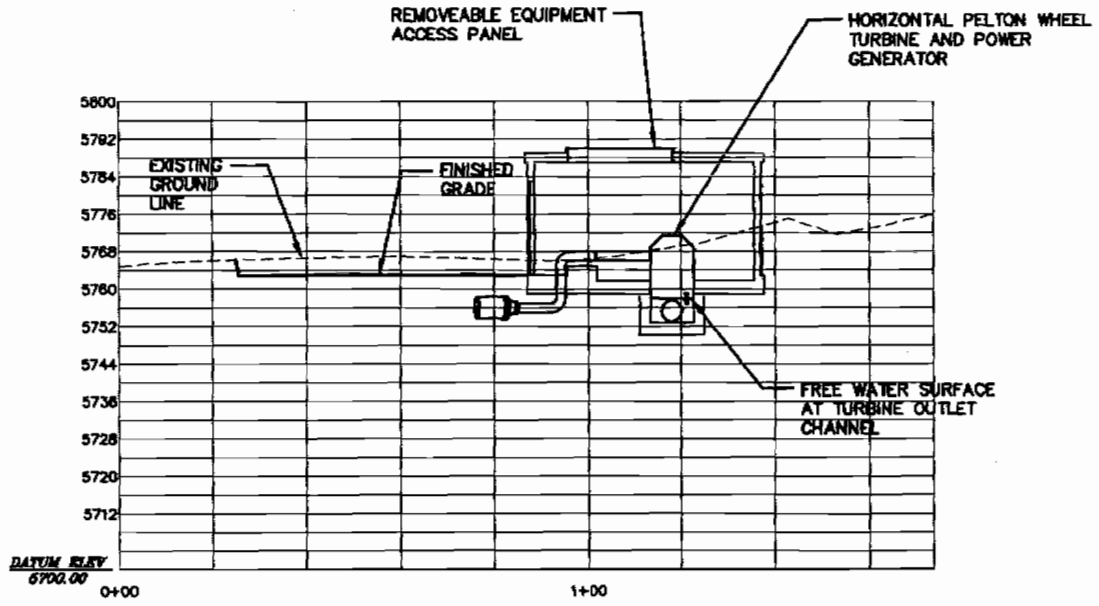

A SECTION
FIG-9

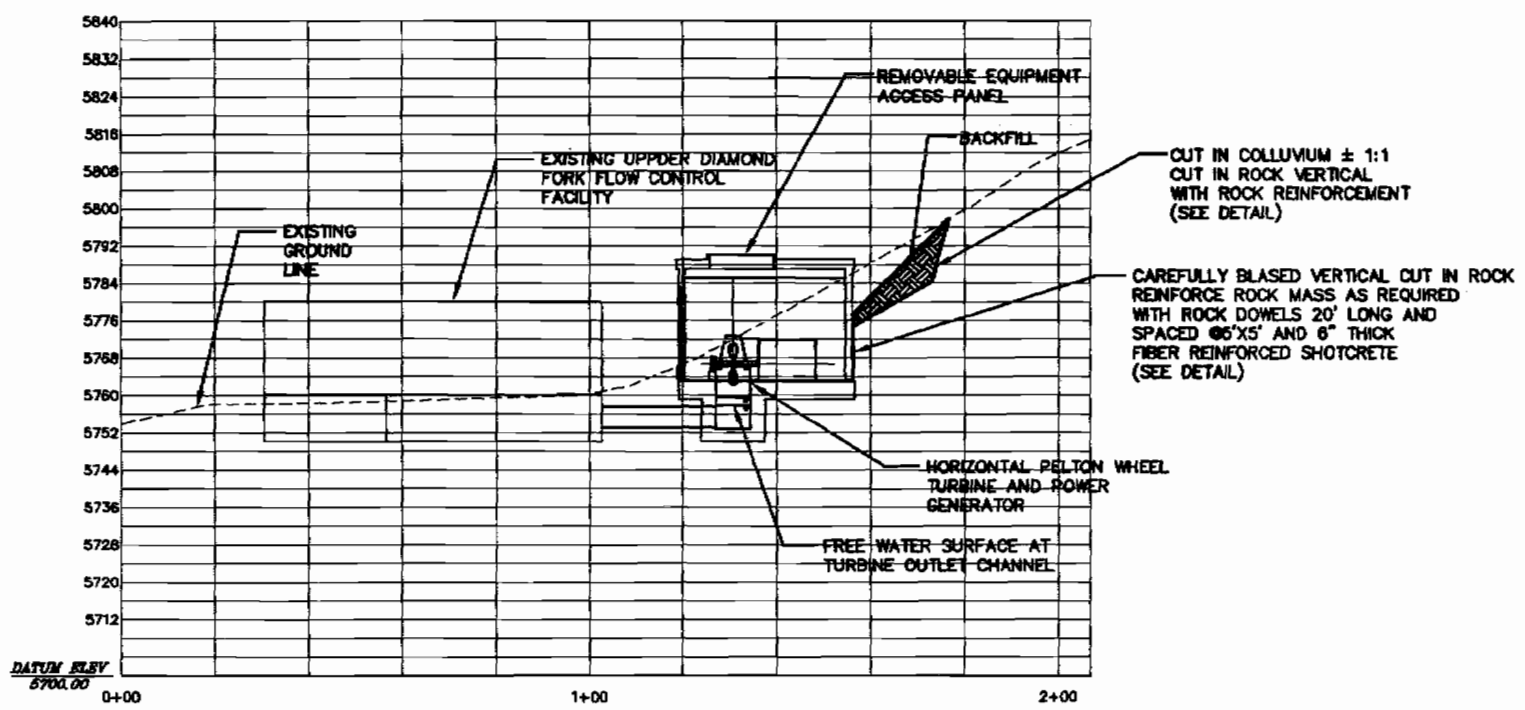

B SECTION
FIG-9

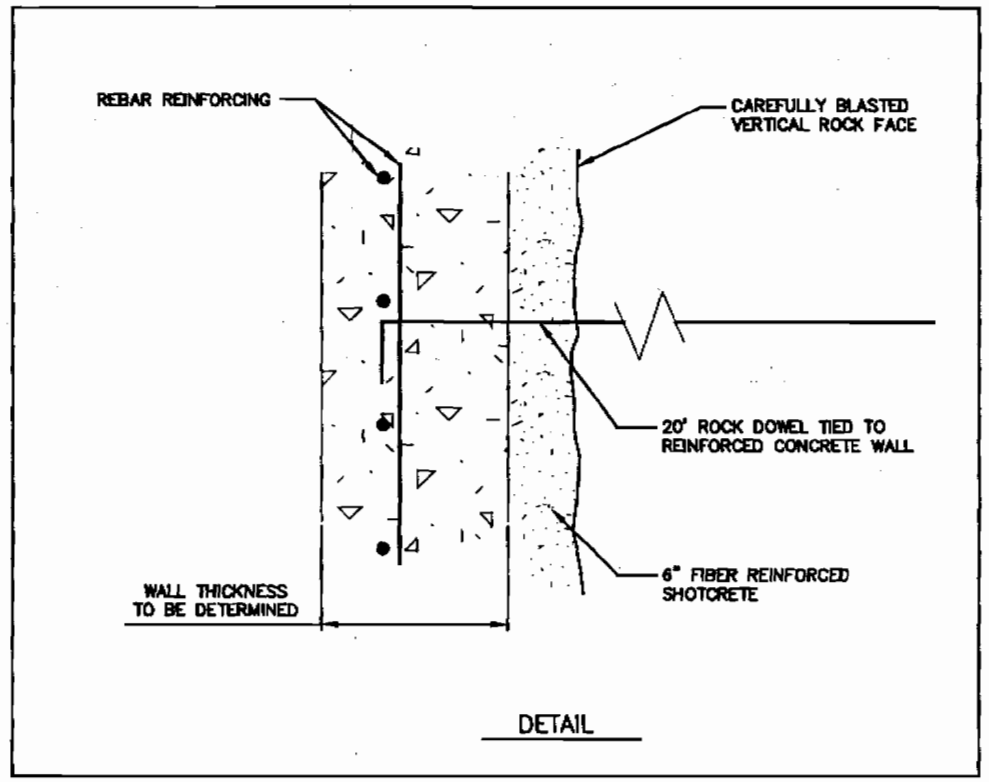

DETAIL

NOT FOR CONSTRUCTION

REV	DATE	BY	DESCRIPTION

SCALE: H: 1" = 20' V: 1" = 20'

WARNING 0 1/2 1 IF THIS BAR DOES NOT MEASURE 1" THEN DRAWING IS NOT TO SCALE.

DESIGNED
DRAWN
CHECKED

SUBMITTED
(PROJECT MANAGER'S NAME) R. C. E. NO. DATE
(COMPANY OFFICER'S NAME) R. C. E. NO. DATE

MWH
MONTGOMERY WATSON HARZA

CENTRAL UTAH WATER CONSERVANCY DISTRICT
SPANISH FORK CANYON – PROVO RESERVOIR PIPELINE ALTERNATIVE
UPPER DIAMOND POWER FACILITY – CROSS SECTIONS
FIGURE V-B-16

CONTRACT NO. X
DATE FEBRUARY 2004
DRAWING NO. FIGURE V-B-16
SHEET NO. 2 of 3

P:\MWH\Central Utah\dwg\Tech Memo 3-C\Sheets\Power Stations\Figure V-B-16.dwg, 2/17/2004 10:23:28 AM

Central Utah Project Completion Program

Quotes

October 2004

UTAH RECLAMATION
MITIGATION
AND CONSERVATION
COMMISSION

Northwest Pipe Company

12005 N. Burgard, Portland, OR 97203
Phone: (503) 285-1400, (800) 824-9824
Fax: (503) 285-2913

FAX
1 Page

To: Don Polla
MWH
Phone: 303-410-4090
FAX: 303-439-2820

Date: 29-Jan-04
Project: Lower Diamond Fork
Alt. 2 w/o Power Generation

Budgetary Quotation

We are pleased to offer prices for steel pipe for the above noted project for materials as listed below. The estimating prices are provided for reference only and Northwest Pipe shall not be bound by pricing or any other provisions herein. Final pricing and delivery can be provided once project requirements are finalized.

SPECIFICATIONS:

Pipe: Manufactured and tested per AWWA C200 from steel conforming to ASTM A1018 gr.36, 42
Length: Standard length to be 48 ft.
Joints: Weld Bell for lap-joint field welding
Coating: Polyethylene tape per AWWA C214, 80 mil system
Lining: Cement Mortar per AWWA C205, 1/2" thickness
Freight: Prices are FOB our plant with full freight allowed to jobsite. Jobsite shall specifically mean truckbed delivery as close to installation site as possible with truck under it's own power. All unloading shall be done by the buyer.

PRICING

WELDED STEEL PIPE

Item	Qty. (ft)	O.D. (in)	Wall (in.)	Yield (psi)	Working Pres.(psi)	Weight lbs./ft	Unit Price $/ft	Extension Tot $
1	2,300	62	0.443	42,000	300.0	435	$268.80	$618,240.00
2	4,700	62	0.517	42,000	350.0	488	$291.10	$1,368,170.00
3	2,400	56	0.467	42,000	350.0	405	$230.96	$554,304.00
4	1,900	56	0.400	42,000	300.0	368	$211.68	$402,192.00
5	23,100	56	0.467	42,000	350.0	405	$237.19	$5,479,089.00
6	34,200	49.875	0.416	42,000	350.0	334	$197.34	$6,749,028.00
7	34,500	49.875	0.356	42,000	300.0	303	$181.99	$6,278,655.00
8	6,700	43.875	0.313	42,000	300.0	247	$146.80	$982,220.00
9	1,800	43.875	0.261	42,000	250.0	223	$126.67	$228,366.00
10	5,998	37.875	0.225	42,000	250.0	178	$103.10	$618,393.80
11	26,410	31.875	0.190	42,000	250.0	124	$75.01	$1,981,014.10
12	7,500	31.875	0.152	42,000	200.0	111	$68.87	$516,525.00
13	4,100	37.875	0.271	42,000	300.0	196	$111.31	$456,371.00
14	940	31.875	0.22768	42,000	300.0	136	$87.96	$82,682.40
	156,548							$26,315,250.30

For Further Information:

If you have any questions, or need additional information, please contact Mr. Bryan Hughes in our sales department or me at the phone number listed above.

NORTHWEST PIPE COMPANY

Bruce Vanderploeg
Chief Engineer

Northwest Pipe Company

12005 N. Burgard, Portland, OR 97203
Phone: (503) 285-1400, (800) 824-9824
Fax: (503) 285-2913

FAX
1 Page

To: Don Polla
MWH
Phone: 303-410-4090
FAX: 303-499-2820

Date: 29-Jan-04

Project: Lower Diamond Fork
Alt. 2

Budgetary Quotation

We are pleased to offer prices for steel pipe for the above noted project for materials as listed below. The estimating prices are provided for reference only and Northwest Pipe shall not be bound by pricing or any other provisions herein. Final pricing and delivery can be provided once project requirements are finalized.

SPECIFICATIONS:

Pipe: Manufactured and tested per AWWA C200 from steel conforming to ASTM A1018 gr.38, 42
Length: Standard length to be 48 ft.
Joints: Weld Bell for lap-joint field welding
Coating: Polyethylene tape per AWWA C214, 80 mil system
Lining: Cement Mortar per AWWA C205, 1/2" thickness
Freight: Prices are FOB our plant with full freight allowed to jobsite. Jobsite shall specifically mean truckbed delivery as close to installation site as possible with truck under it's own power. All unloading shall be done by the buyer.

PRICING
WELDED STEEL PIPE

Item	Qty. (lf)	O.D. (in)	Wall (in.)	Yield (psi)	Working Pres.(psi)	Weight lbs /lf	Unit Price $/lf	Extension Tot $
1	20,640	62	0.443	42,000	300.0	485	$266.28	$5,496,019.20
2	2,100	62	0.517	42,000	350.0	488	$295.78	$621,033.00
3	2,100	62	0.590	42,000	400.0	528	$306.93	$644,553.00
4	30,900	56	0.533	42,000	400.0	443	$240.58	$7,433,922.00
5	6,110	56	0.467	42,000	350.0	405	$237.61	$1,451,797.10
6	13,060	56	0.400	42,000	300.0	368	$216.58	$2,835,032.20
7	1,900	56	0.333	42,000	250.0	328	$206.11	$391,609.00
8	17,200	56	0.267	42,000	200.0	290	$186.39	$3,205,908.00
9	5,500	49.875	0.356	42,000	300.0	303	$182.92	$1,006,060.00
10	2,400	49.875	0.297	42,000	250.0	272	$170.23	$408,552.00
11	4,000	86	0.410	42,000	200.0	582	$372.66	$1,491,440.00
12	17,000	86	0.512	42,000	250.0	668	$418.44	$7,113,480.00
13	11,562	86	0.614	42,000	300.0	759	$458.23	$5,298,055.26
	184,502							$37,397,480.76

For Further Information:

If you have any questions, or need additional information, please contact Mr. Bryan Hughes in our sales department or me at the phone number listed above.

NORTHWEST PIPE COMPANY

Bruce Vanderploeg
Chief Engineer

FLO-CONTROLS Quotation

To: M.W.H.

Bid Date:01/16/04
Quote: s-0405

Fax: 303-439-2820
Attn: Don Polla
Project: Ft. Collins pump station

Terms: Net 30 Days
Validity: 30 Days
FOB: Jobsite

Mail Order To: Flo-Controls, Inc.
4242 South Broadway
Englewood, CO 80113
Phone/Fax # (303) 762-8215 / 0200
www.flo-controls.com

Skip Cleland

BUDGET ESTIMATE

We are pleased to offer the equipment listed below for your consideration for the subject project. Prices do not include taxes. Subsequent charges and add-ons will be priced at the time of transaction. The manufacturer's terms & conditions apply. Field service or startup is not included. However, local factory trained technicians are available at our standard field service rates. Prices are for items specifically identified and do not include unmentioned accessories.

Don,
As you can see below, we are recommending you consider "High Performance" style butterfly valves for your pump check application in lou of the ball valves requested. Especially in these size, the price - laying length - weight - throttling characteristics - actuator sizing - make an HP butterfly valve a superior selection. Please contact us if you would like to discuss the pros and cons of this valve application.

FlowSeal High performance style butterfly valve with carbon steel, ANSI 150# fully fugged body rated for 285 psi, 316 stainless steel disc, 17-4 ph shaft, PTFE/Viton seat, and PTFE adjustable packing, complete with an EIM serice M2CP electric operator for modulating service, 115/60/1 power, NEMA 4x & 6, with integral reversing starter and transformer, and Futronic III control package for 4-20mA control signal, and local controls (H/O/A selector switch, O/S/C push buttons, and O/C LED lights)

Qty:	Size:	Ordering Code:	Net Each:
1	24"	24-1L-121TTG-B*MCEW-B	$14,000.00
1	30"	30-1L-121TTG-B*M6V4-B	$19,500.00
1	36"	36-1L-121TTG-B*MCDY-B	$29,500.00

24" Plug Modulating $16,700
30" $23,000
36" $31,800

J. L. COX, INC.

January 17, 2001

Mr. Ernest Maschner
Montgomery Watson Constructors, Inc.
370 Interlocken Blvd., Suite 300
Broomfield, CO. 80021

FAX: (303) 439-2850

Reference: Northwest Water Purification Plant
Work Package No. 5
Transmission Line Jack & Bore

Dear Mr. Maschner:

It is our pleasure to offer this quotation for the installation of the 84" and 42" Waterline pipe by Boring or Jacking on the above referenced project. You will note that we have included pricing for the installation of the working shafts at each location (one end only) per the request of Mr. Chris Bassa of your Dallas office. Our scope of work is as follows:

1. Excavation of the sheeted working shafts
2. Tunneling of the primary liner complete in place
3. Threading the 84" and 42" waterline pipe in the liner and grouting the annular void.

We have excluded the following:

1. 84" and 42" waterline pipe
2. All Dewatering

You will note that I have added the cost of the payment and construction bond separately.

We trust that you will give our offer your consideration and we look forward to working with your firm on this project.

If you have any questions relating to this quotation, please feel free to contact me.

Sincerely,

Ronald E. Roberts
Vice President of Tunneling Sales and Estimating

BID SCHEDULE – UNIT PRICE

One Bid Schedule is provided for the construction of the Transmission Line Jack and Bore – Work Package No. 5, with respect to the Northeast Water Purification System project.

Bid Item	Description	Quantity	Unit	Unit Price	Total Price in Figures
	84" Pipe				
1.	Jack and Bore at Lake Houston Parkway, approx. 2000' from Raw Water Pump Station	200	LF	$1,610.00	$322,000.00
	Bore and Jack Shaft			$29,900.00	$ 29,900.00
2.	Jack and Bore at Railroad located West of new Water Purification Plant	75	LF	$1,610.00	$120,750.00
	Bore and Jack Shaft			$29,900.00	29,900.00
3.	Jack and Bore at Beltway 8 – West Bound.	70	LF	$1,610.00	$112,700.00
	Bore and Jack Shaft			$29,900.00	29,900.00
4.	Jack and Bore at Beltway 8 – East Bound.	70	LF	$1,610.00	$112,700.00
	Bore and Jack Shaft			$29,900.00	29,900.00
	42" Pipe				
5.	Jack and Bore at Homestead Road.	150	LF	$837.50	$125,625.00
	Bore and Jack Shaft			$27,500.00	27,500.00
6.	Jack and Bore at Mt. Houston Road	150	LF	$837.50	$125,625.00
	Bore and Jack Shaft			$27,500.00	27,500.00
7.	Jack and Bore at Hopper Road	75	LF	$837.50	$62,812.50
	Bore and Jack Shaft			$27,500.00	27,500.00
	TOTAL				
	84" PIPE				
5.	Jack and Bore under Road	150	LF	$1,610.00	$241,500.00
	Bore and Jack Shaft			$29,900.00	29,900.00
6.	Jack and Bore under Pipeline	50	LF	$1,610.00	$ 80,500.00
	Bore and Jack Shaft			$29,900.00	29,900.00
					$1,566,112.50 RLR
	Total				~~$1,568,112.50~~
	Add Bond				~~47,043.38~~ RLR
					46,983.38

BORING PITS 261,900
BORING 1,304,212

It is understood that the Bidder has made independent examinations of the conditions of the project and has carefully studied the attached Documents.

Howard L. Roberts for J.L. COX, Inc
Signature of bidder

JANUARY 17, 2001
Date

Subj: RFQ
Date: 9/4/2003 3:48:20 PM Mountain Daylight Time
From: emaltre@comcast.net (Erick Maltre)
To: gwvalmit@aol.com
CC: eric.brewer@valves.spx.com, erick.maltre@valves.spx.com (Erick Maltre)

Chris,

Here are the numbers you were looking for.

14" 810S $60,000
24" 810S $77,000
14" 814 w/shroud $67,916
24" 814 w/shroud $96,250

18" 814 w/shroud $77,500

16" orifice W/ 24" Flange $14,836

Hope this helps. Let me know if you have any questions.

Best Regards,

Erick

---------- Headers ----------
Return-Path: <emaltre@comcast.net>
Received: from rly-xn05.mx.aol.com (rly-xn05.mail.aol.com [172.20.83.138]) by air-xn03.mail.aol.com (v95.12) with ESMTP id MAILINXN33-6543f57b31f309; Thu, 04 Sep 2003 17:48:20 -0400
Received: from sccmhc13.comcast.net (sccmhc13.comcast.net [204.127.202.64]) by rly-xn05.mx.aol.com (v95.1) with ESMTP id MAILRELAYINXN510-6543f57b31f309; Thu, 04 Sep 2003 17:48:15 2000
Received: from erick (c-24-127-82-124.we.client2.attbi.com[24.127.82.124](untrusted sender))
by comcast.net (sccmhc13) with SMTP
id <20030904203424016006jc0oe>; Thu, 4 Sep 2003 20:34:25 +0000
From: "Erick Maltre" <emaltre@comcast.net>
To: <gwvalmit@aol.com>
Cc: <eric.brewer@valves.spx.com>, "Erick Maltre" <erick.maltre@valves.spx.com>
Subject: RFQ
Date: Fri, 5 Sep 2003 13:36:24 -0700
Message-ID: <ACEEIOHJAGJNLEBJMNJGGEKHCAAA.emaltre@comcast.net>
MIME-Version: 1.0
Content-Type: text/plain;
charset="iso-8859-1"
Content-Transfer-Encoding: 7bit
X-Priority: 3 (Normal)
X-MSMail-Priority: Normal
X-Mailer: Microsoft Outlook IMO, Build 9.0.2416 (9.0.2910.0)

Central Utah Water Conservancy District
ULS Alternatives

Easement Cost Estimate Summary

General

The cost information was gathered from three main sources.

1. County Tax records
2. Various Realtors
3. A "Spanish Fork Canyon - Nephi Irrigation System, Designs and Estimates Appendix, dated March 1998"

From the NIS appendix, 25% of the permanent easement was used for the temporary easement. This trend was used in these estimates.

Charles Wixom of Osmond Real Estate in Spanish Fork (798-1200) gave estimates of
$10k - $18k/acre for residential land in the Santaquin and Payson areas
$8k - $10k/acre for agricultural land in the Santaquin and Payson areas
$5k - $7k/acre for agricultural land in the Santaquin and Mona Reservoir areas.

County tax record data was taken from sample properties along the alignment and a weighted average was estimated based on length of exposed property along easement and land use.

Spanish Fork Canyon Pipeline
Total Permanent Easement Cost = $81,000
Total Temporary Easement Cost = $223,500
Estimated Number of Properties = 3
Cost of Appraisal and Negotiation at $2,500/property = $7,500
Total = $312,000

Spanish Fork-Santaquin Pipeline
Total Permanent Easement Cost = $663,900
Total Temporary Easement Cost = $151,050
Estimated Number of Properties = 137
Cost of Appraisal and Negotiation at $2,500/property = $342,500
Total = $1,157,450

Mapleton-Springville Lateral Pipeline
Total Permanent Easement Cost = $33,850
Total Temporary Easement Cost = $99,050
Estimated Number of Properties = 30
Cost of Appraisal and Negotiation at $2,500/property = $75,000
Total = $207,900

Spanish Fork-Provo Reservoir Canal Pipeline
Total Permanent Easement Cost = $282,150
Total Temporary Easement Cost = $27,550
Estimated Number of Properties = 30
Cost of Appraisal and Negotiation at $2,500/property = $75,000
Total = $384,700

Santaquin – Mona Reservoir Pipeline
Total Permanent Easement Cost = $266,100
Total Temporary Easement Cost = $39,200
Estimated Number of Properties = 25
Cost of Appraisal and Negotiation at $2,500/property = $62,500
Total = $367,800

TABLE 8-3

ALTERNATIVE 2

RIGHT-OF-WAY EASEMENT WIDTHS FOR CONVEYANCE PIPELINES[1]

From Distance Marker	To Distance Marker	Length (Feet)	Temporary Easement Width (Feet)	Permanent Easement Width (Feet)	Additional Temporary Easement Area (acre)	Additional Permanent Easement Area (acre)	Additional Temporary Easement (Cost/acre)	Additional Permanent Easement (Cost/acre)	Additional Temporary Easement Total Cost	Additional Permanent Easement Total Cost
Spanish Fork–Canyon Pipeline										
100+00	107+50	750	0	0	0.00	0.00				
107+50	119+10	1160	0	0	0.00	0.00				
119+10	124+80	570	0	0	0.00	0.00				
124+80	136+30	1150	0	0	0.00	0.00				
136+30	140+10	380	0	0	0.00	0.00				
140+10	145+90	580	0	0	0.00	0.00				
145+90	150+00	410	0	0	0.00	0.00				
150+00	156+00	600	0	0	0.00	0.00				
156+00	167+00	1100	0	0	0.00	0.00				
167+00	228+00	6100	0	0	0.00	0.00				
228+00	235+70	770	0	0	0.00	0.00				
235+70	258+00	2230	0	0	0.00	0.00				
258+00	267+90	990	0	0	0.00	0.00				
267+90	284+70	1680	0	0	0.00	0.00				
284+70	297+70	1300	0	0	0.00	0.00				
297+70	307+00	930	0	0	0.00	0.00				
307+00	314+60	760	0	0	0.00	0.00				
314+60	321+50	690	0	0	0.00	0.00				
321+50	330+40	890	0	0	0.00	0.00				
330+40	339+20	880	0	0	0.00	0.00				
339+20	346+20	700	0	0	0.00	0.00				
346+20	356+90	1070	0	0	0.00	0.00				
356+90	365+60	870	0	0	0.00	0.00				
365+60	378+60	1300	0	0	0.00	0.00				
378+60	385+00	640	0	0	0.00	0.00				
385+00	392+00	700	0	0	0.00	0.00				
392	395+00	300	40	60	0.28	0.41	$ 10,500.00	$ 42,000.00	$ 2,892.56	$ 17,355.37

TABLE 8-3

ALTERNATIVE 2

RIGHT-OF-WAY EASEMENT WIDTHS FOR CONVEYANCE PIPELINES[1]

From Distance Marker	To Distance Marker	Length (Feet)	Temporary Easement Width (Feet)	Permanent Easement Width (Feet)	Additional Temporary Easement Area (acre)	Additional Permanent Easement Area (acre)	Additional Temporary Easement (Cost/acre)	Additional Permanent Easement (Cost/acre)	Additional Temporary Easement Total Cost	Additional Permanent Easement Total Cost
395+00	406+00	1100	40	60	1.01	1.52	$ 10,500.00	$ 42,000.00	$ 10,606.06	$ 63,636.36
406+00	420+00	1400	0	0	0.00	0.00				
420+00	426+00	600	0	0	0.00	0.00				
426+00	428+50	250	0	0	0.00	0.00				
428+50	433+00	450	0	0	0.00	0.00				
433+00	440+50	750	0	0	0.00	0.00				
440+50	445+79	529	0	0	0.00	0.00				
Construction Staging Area					20.00		$10,500		$ 210,000.00	
445+79	468+08	2229	0	0	0.00	0.00				
						Totals			$ 223,498.62	$ 80,991.74
Spanish Fork–Provo Reservoir Canal Pipeline										
53+38	90+00	3662	0	0	0.00	0.00			$ -	$ -
90+00	240+90	15090	0	0	0.00	0.00			$ -	$ -
240+90	242+80	190	0	0	0.00	0.00			$ -	$ -
242+80	245+30	250	0	0	0.00	0.00			$ -	$ -
245+30	255+00	970	0	0	0.00	0.00			$ -	$ -

BLE 8-3

ALTERNATIVE 2

RIGHT-OF-WAY EASEMENT WIDTHS FOR CONVEYANCE PIPELINES[1]

(Page 3 of 8)

From Distance Marker	To Distance Marker	Length (Feet)	Temporary Easement Width (Feet)	Permanent Easement Width (Feet)	Additional Temporary Easement Area (acre)	Additional Permanent Easement Area (acre)	Additional Temporary Easement (Cost/acre)	Additional Permanent Easement (Cost/acre)	Additional Temporary Easement Total Cost	Additional Permanent Easement Total Cost
255+00	350+00	9500	0	0	0.00	0.00			$ -	$ -
350+00	411+00	6100	0	0	0.00	0.00			$ -	$ -
411+00	485+00	7400	0	0	0.00	0.00			$ -	$ -
485+00	501+00	1600	0	0	0.00	0.00			$ -	$ -
501+00	510+00	900	0	0	0.00	0.00			$ -	$ -
510+00	540+00	3000	0	0	0.00	0.00			$ -	$ -
540+00	606+13	6613	0	0	0.00	0.00			$ -	$ -
606+13	635+00	2887	0	0	0.00	0.00			$ -	$ -
635+00	652+00	1700	0	0	0.00	0.00			$ -	$ -
652+00	675+00	2300	0	0	0.00	0.00			$ -	$ -
675+00	704+36	2936	0	60	0.00	4.04	$ 5,000.00	$ 20,000.00	$ -	$ 80,881.54
704+36	741+00	3664	0	0	0.00	0.00			$ -	$ -
741+00	764+36	2336	0	0	0.00	0.00			$ -	$ -
764+36	779+36	1500	20	60	0.69	2.07	City Park			
779+36	803+36	2400	0	0	0.00	0.00			$ -	$ -
803+36	807+36	400	0	0	0.00	0.00			$ -	$ -
807+36	817+36	1000	0	0	0.00	0.00			$ -	$ -
817+36	820+86	350	0	30	0.00	0.24	$ 10,000.00	$ 40,000.00	$ -	$ 9,641.87
820+86	821+86	100	0	60	0.00	0.14	$ 10,000.00	$ 40,000.00	$ -	$ 5,509.64
821+86	834+36	1250	0	0	0.00	0.00			$ -	$ -
834+36	899+36	6500	0	0	0.00	0.00			$ -	$ -
899+36	910+56	1120	0	20	0.00	0.51	$ 18,000.00	$ 70,000.00	$ -	$ 35,996.33
910+56	914+36	380	0	0	0.00	0.00			$ -	$ -
914+36	921+36	700	0	0	0.00	0.00			$ -	$ -
921+36	941+61	2025	0	0	0.00	0.00			$ -	$ -
941+61	944+36	275	0	0	0.00	0.00			$ -	$ -
944+36	945+86	150	0	0	0.00	0.00			$ -	$ -
945+86	981+36	3550	0	0	0.00	0.00			$ -	$ -
981+36	987+36	600	20	0	0.28	0.00	$ 50,000.00	$ 200,000.00	$ 13,774.10	$ -

TABLE 8-3

ALTERNATIVE 2

RIGHT-OF-WAY EASEMENT WIDTHS FOR CONVEYANCE PIPELINES[1]

From Distance Marker	To Distance Marker	Length (Feet)	Temporary Easement Width (Feet)	Permanent Easement Width (Feet)	Additional Temporary Easement Area (acre)	Additional Permanent Easement Area (acre)	Additional Temporary Easement (Cost/acre)	Additional Permanent Easement (Cost/acre)	Additional Temporary Easement Total Cost	Additional Permanent Easement Total Cost
987+36	988+86	150	0	60	0.00	0.21	$ 15,000.00	$ 60,000.00	$ -	$ 12,396.69
988+86	993+36	450	0	60	0.00	0.62			$ -	$ -
993+36	1007+36	1400	0	0	0.00	0.00			$ -	$ -
1007+36	1013+36	600	20	50	0.28	0.69	$ 50,000.00	$ 200,000.00	$ 13,774.10	$ 137,741.05
1013+36	1015+36	200	0	0	0.00	0.00			$ -	$ -
1015+36	1037+36	2200	0	0	0.00	0.00			$ -	$ -
1037+36	1052+36	1500	0	0	0.00	0.00			$ -	$ -
1052+36	1072+36	2000	0	0	0.00	0.00			$ -	$ -
1072+36	1091+91	1955	20	60	0.90	2.69	CUP Land			
1091+91	1092+91	100	20	100	0.05	0.23	CUP Land			
								Totals	$ 27,548.21	$ 282,167.13

TABLE 8-3

ALTERNATIVE 2

RIGHT-OF-WAY EASEMENT WIDTHS FOR CONVEYANCE PIPELINES[1]

From Distance Marker	To Distance Marker	Length (Feet)	Temporary Easement Width (Feet)	Permanent Easement Width (Feet)	Additional Temporary Easement Area (acre)	Additional Permanent Easement Area (acre)	Additional Temporary Easement (Cost/acre)	Additional Permanent Easement (Cost/acre)	Additional Temporary Easement Total Cost	Additional Permanent Easement Total Cost
Spanish Fork-Santaquin Pipeline										
13+21	31+00	1,779	30	50	1.23	2.04	$ 4,500.00	$ 18,000.00	$ 5,513.43	$ 36,756.20
31+00	40+00	900	0	30	0.00	0.62	$ 2,500.00	$ 10,000.00	$ -	$ 6,198.35
40+00	52+00	1,200	0	0	0.00	0.00	$ 4,500.00	$ 18,000.00	$ -	$ -
52+00	80+00	2,800	20	0	1.29	0.00	city golf course			
80+00	103+81	2,381	30	50	1.64	2.73	$ 2,500.00	$ 10,000.00	$ 4,099.52	$ 27,330.12
103+81	154+08	5,027	20	0	2.31	0.00	$ 2,500.00	$ 10,000.00	$ 5,770.20	$ -
154+08	192+11	3,803	20	0	1.75	0.00	$ 3,000.00	$ 12,000.00	$ 5,238.29	$ -
192+11	240+90	4,879	30	28	3.36	3.14	$ 2,500.00	$ 10,000.00	$ 8,400.48	$ 31,361.80
240+90	245+35	445	30	50	0.31	0.51	$ 2,500.00	$ 10,000.00	$ 766.18	$ 5,107.90
245+35	273+64	2,829	0	17	0.00	1.10	$ 12,500.00	$ 50,000.00	$ -	$ 55,203.17
273+64	284+00	1,036	0	20	0.00	0.48	$ 3,750.00	$ 15,000.00	$ -	$ 7,134.99
284+00	313+14	2,914	20	17	1.34	1.14	$ 3,750.00	$ 15,000.00	$ 5,017.22	$ 17,058.54
313+14	339+38	2,624	0	0	0.00	0.00			$ -	$ -
339+38	400+00	6,062	0	0	0.00	0.00			$ -	$ -
400+00	483+54	8,354	0	0	0.00	0.00			$ -	$ -
483+54	518+00	3,446	40	60	3.16	4.75	$ 3,000.00	$ 12,000.00	$ 9,493.11	$ 56,958.68
518+00	547+98	2,998	0	0	0.00	0.00			$ -	$ -
547+98	612+89	6,491	0	0	0.00	0.00			$ -	$ -
612+89	710+15	9,726	0	0	0.00	0.00			$ -	$ -
710+15	736+00	2,585	30	17	1.78	1.01	$ 4,500.00	$ 18,000.00	$ 8,011.36	$ 18,159.09
736+00	742+00	600	30	17	0.41	0.23	$ 4,500.00	$ 18,000.00	$ 1,859.50	$ 4,214.88
742+00	743+00	100	0	0	0.00	0.00			$ -	$ -
743+00	838+00	9,500	30	50	6.54	10.90	$ 4,500.00	$ 18,000.00	$ 29,442.15	$ 196,280.99
Construction Staging Area					10.00		$ 4,500.00		$ 45,000.00	
838+00	839+00	100	30	40	0.07	0.09	$ 4,500.00	$ 18,000.00	$ 309.92	$ 1,652.89
839+00	876+00	3,700	30	50	2.55	4.25	$ 4,500.00	$ 18,000.00	$ 11,466.94	$ 76,446.28
876+00	876+50	50	0	0	0.00	0.00	$ 4,500.00	$ 18,000.00	$ -	$ -

TABLE 8-3

ALTERNATIVE 2

RIGHT-OF-WAY EASEMENT WIDTHS FOR CONVEYANCE PIPELINES[1]

From Distance Marker	To Distance Marker	Length (Feet)	Temporary Easement Width (Feet)	Permanent Easement Width (Feet)	Additional Temporary Easement Area (acre)	Additional Permanent Easement Area (acre)	Additional Temporary Easement (Cost/acre)	Additional Permanent Easement (Cost/acre)	Additional Temporary Easement Total Cost	Additional Permanent Easement Total Cost
876+50	877+00	50	60	40	0.07	0.05	$ 4,500.00	$ 18,000.00	$ 309.92	$ 826.45
877+00	877+50	50	20	40	0.02	0.05	$ 4,500.00	$ 18,000.00	$ 103.31	$ 826.45
877+50	877+90	40	20	80	0.02	0.07	$ 4,500.00	$ 18,000.00	$ 82.64	$ 1,322.31
877+90	878+90	100	20	40	0.05	0.09	$ 4,500.00	$ 18,000.00	$ 206.61	$ 1,652.89
878+90	879+40	50	20	120	0.02	0.14	$ 4,500.00	$ 18,000.00	$ 103.31	$ 2,479.34
879+40	879+70	30	90	50	0.06	0.03	$ 2,500.00	$ 18,000.00	$ 154.96	$ 619.83
879+70	935+99	5,629	30	50	3.88	6.46	$ 2,500.00	$ 18,000.00	$ 9,691.80	$ 116,301.65
						Totals			$ 151,040.86	$ 663,892.79
Mapleton–Springville Lateral Pipeline										
10+00	21+67	1,167	0	0	0.00	0.00			$ -	$ -
21+67	29+45	778	0	0	0.00	0.00			$ -	$ -
29+45	72+55	4,310	30	0	2.97	0.00	$ 1,000.00	$ 4,000.00	$ 2,968.32	$ -
72+55	75+77	322	0	0	0.00	0.00			$ -	$ -
75+77	80+85	508	0	0	0.00	0.00			$ -	$ -
80+85	106+01	2,516	0	0	0.00	0.00			$ -	$ -
106+01	162+11	5,610	0	0	0.00	0.00			$ -	$ -
162+11	180+00	1,789	0	10	0.00	0.41	$ 15,000.00	$ 60,000.00	$ -	$ 24,641.87
180+00	197+50	1,750	0	0	0.00	0.00			$ -	$ -
197+50	210+00	1,250	30	0	0.86	0.00	$ 26,000.00	$ 105,000.00	$ 22,382.92	$ -
210+00	244+50	3,450	0	0	0.00	0.00			$ -	$ -
244+50	293+00	4,850	30	0	3.34	0.00	$ 20,000.00	$ 80,000.00	$ 66,804.41	$ -
293+00	300+37	737	0	0	0.00	0.00			$ -	$ -
300+37	305+71	534	60	20	0.74	0.25	$ 5,000.00	$ 20,000.00	$ 3,677.69	$ 4,903.58
305+71	310+38	467	60	20	0.64	0.21	$ 5,000.00	$ 20,000.00	$ 3,216.25	$ 4,288.34
310+38	311+88	150	0	0	0.00	0.00			$ -	$ -
						Totals			$ 99,049.59	$ 33,833.79
Santaquin - Mona Reservoir Pipeline										

TABLE 8-3

ALTERNATIVE 2

RIGHT-OF-WAY EASEMENT WIDTHS FOR CONVEYANCE PIPELINES[1]

(Page 7 of 8)

From Distance Marker	To Distance Marker	Length (Feet)	Temporary Easement Width (Feet)	Permanent Easement Width (Feet)	Additional Temporary Easement Area (acre)	Additional Permanent Easement Area (acre)	Additional Temporary Easement (Cost/acre)	Additional Permanent Easement (Cost/acre)	Additional Temporary Easement Total Cost	Additional Permanent Easement Total Cost
10+00	165+00	15,500	30	50	10.39	17.33	$ 1,750.00	$ 7,000.00	$ 18,191.13	$ 121,320.86
165+00	179+00	1,400	30	115	0.96	3.70	$ 1,750.00	$ 7,000.00	$ 1,687.33	$ 25,872.36
179+00	322+50	14,350	30	50	9.64	16.17	$ 1,750.00	$ 7,000.00	$ 16,875.11	$ 113,200.73
322+50	342+00	1,950	20	0	0.90	0.00	$ 1,750.00	$ 7,000.00	$ 1,566.80	$ -
342+00	360+00	1,800	30	50	1.24	2.07	$ 1,750.00	$ 7,000.00	$ 2,169.42	$ 14,462.81
360+00	415+00	5,500	30	50	3.79	6.31	$ 1,750.25	$ 7,001.00	$ 6,629.73	$ 44,198.23
						Totals			$ 47,119.53	$ 319,055.00
						Over all Totals			$ 548,256.81	$ 1,379,940.45

* Minimum Easement Width. ** Center of pipe located location varies 95' to 125' from centerline of RR track) (Sta of RR
* east easement of pipeline to be located 65' west of RR fence

1. See Table 2-_ for land requirements associated with non-linear facilities.
2. Existing easement width taken from UDOT plans (limited access or right-of-way lines were used).
3. Existing easement width taken from fence line to fence line.
4. Existing easement width taken from curb to curb.
5. Existing easement width taken from width of roadway.
6. Existing easement width taken from existing Mapleton Canal easement.
7. Existing easement width taken from GIS Data from Assessors Office.
8. Existing easement width taken from fence line to back of sidewalk
9. Existing easement width taken from back of sidewalk to back of sidewalk.
10. Existing UDOT right-of-way - I-15 or Highway crossing.
11. Private property.
12. There may be an existing ROW along section line.
13. Assumed
14. South Fence line to South edge of Canal (canal approx. 15 to 20 feet wide)
15. Access follows existing dirt roads on Private property
16. 100 foot right-of-way option available to Provo City from State Hospital
17. Proposed road extension per Provo City Street Department.
18. Ro[illegible]Canyon Park

TABLE 8-3

ALTERNATIVE 2

RIGHT-OF-WAY EASEMENT WIDTHS FOR CONVEYANCE PIPELINES[1]

From Distance Marker	To Distance Marker	Length (Feet)	Temporary Easement Width (Feet)	Permanent Easement Width (Feet)	Additional Temporary Easement Area (acre)	Additional Permanent Easement Area (acre)	Additional Temporary Easement (Cost/acre)	Additional Permanent Easement (Cost/acre)	Additional Temporary Easement Total Cost	Additional Permanent Easement Total Cost

19. Back of sidewalk to back of curb
20. Edge of road to back of curb
21. Provo City 4800 North Connector Road Plans (June 2002)

[redacted]ment table (version 1).doc]

Property Values for ULS Pipeline Segments

Pipeline	Approximate Station	Area (acre)	Market Value ($)	cost (acre/$)	25% Cost (acre/$)
Santaquin	916+00	39.26	$ 235,376.00	$ 5,995	$ 1,499
Santaquin	820+00	5.25	$ 78,236.00	$ 14,902	$ 3,726
Santaquin	800+00	2.25	$ 6,905.00	$ 3,069	$ 767
Santaquin	787+00	7.32	$ 312,809.00	$ 42,733	$ 10,683
Santaquin	760+00	10.91	$ 129,283.00	$ 11,850	$ 2,962
Santaquin	735+00	12.55	$ 253,196.00	$ 20,175	$ 5,044
Santaquin	510+00	16.41	$ 61,626.00	$ 3,755	$ 939
Santaquin	500+00	2.00	$ 40,000.00	$ 20,000	$ 5,000
Santaquin	300+00	8.14	$ 156,191.00	$ 19,188	$ 4,797
Santaquin	253+00	3.40	$ 231,179.00	$ 67,994	$ 16,998
Santaquin	230+00	39.98	$ 491,474.00	$ 12,293	$ 3,073
Santaquin	162+00	204.38	$ 2,228,731.00	$ 10,905	$ 2,726
Mapleton	40+00	41.10	$ 88,475.00	$ 2,153	$ 538
Mapleton	65+00	80.00	$ 312,838.00	$ 3,910	$ 978
Mapleton	165+00	3.17	$ 63,890.00	$ 20,155	$ 5,039
Mapleton	175+00	4.00	$ 238,102.00	$ 59,526	$ 14,881
Mapleton	205+00	19.04	$ 1,985,277.00	$ 104,269	$ 26,067
Mapleton	245+00	3.42	$ 301,566.00	$ 88,177	$ 22,044
Mapleton	250+00	1.00	$ 285,500.00	$ 285,500	$ 71,375
Mapleton	260+00	0.92	$ 38,020.00	$ 41,326	$ 10,332
Mapleton	283+00	5.69	$ 127,601.00	$ 22,425	$ 5,606
Mapleton	272+00	7.20	$ 231,859.00	$ 32,203	$ 8,051
Mapleton	288+00	0.29	$ 11,685.00	$ 40,293	$ 10,073
Mapleton	305+00	8.52	$ 174,339.00	$ 20,462	$ 5,116
Provo Reservoir	680+00	2.52	$ 69,328.00	$ 27,511	$ 6,878
Provo Reservoir	685+00	2.16	$ 14,854.00	$ 6,877	$ 1,719
Provo Reservoir	820+00	1.00	$ 39,372.00	$ 39,372	$ 9,843
Provo Reservoir	821+00	1.05	$ 41,345.00	$ 39,376	$ 9,844
Provo Reservoir	900+00	0.70	$ 42,948.00	$ 61,354	$ 15,339
Provo Reservoir	900+00	0.44	$ 299,054.00	$ 679,668	$ 169,917
Provo Reservoir	910+00	3.26	$ 100,069.00	$ 30,696	$ 7,674
Provo Reservoir	982+00	1.63	$ 485,799.00	$ 298,036	$ 74,509
Provo Reservoir	987+00	0.50	$ 28,499.00	$ 56,998	$ 14,250
Provo Reservoir	1000+00	11.80	$ 2,345,274.00	$ 198,752	$ 49,688
Heber - 1899-2	1540+00	2.52	$ 40,572.00	$ 16,100	$ 4,025
Heber - 1913	1555+00	2.00	$ 180,491.00	$ 90,246	$ 22,561
Heber - 1921	1555+00	1.34	$ 118,108.00	$ 88,140	$ 22,035
Heber - 1910	1565+00	23.24	$ 389,853.00	$ 16,775	$ 4,194
Heber - 1906	1565+00	4.63	$ 338,002.00	$ 73,003	$ 18,251
Heber - 1931-4	1590+00	5.17	$ 428,525.00	$ 82,887	$ 20,722
Heber - 1965	1590+00	1.40	$ 217,304.00	$ 155,217	$ 38,804
Heber - 2000	1613+00	1.00	$ 169,143.00	$ 169,143	$ 42,286
Heber - 1987	1628+00	72.00	$ 1,161,623.00	$ 16,134	$ 4,033
Heber - 2036	1633+00	5.20	$ 264,576.00	$ 50,880	$ 12,720
Heber - 2023	1655+00	20.00	$ 322,000.00	$ 16,100	$ 4,025
Heber - 1326	1660+00	68.78	$ 1,253,845.00	$ 18,230	$ 4,557

Property Values for ULS Pipeline Segments

Heber - 1341	1719+00	0.48	$ 132,716.00	$ 276,492	$ 69,123
Heber - 1319	1707+00	7.15	$ 265,741.00	$ 37,167	$ 9,292
Heber - 1351-2	1753+00	1.05	$ 192,683.00	$ 183,508	$ 45,877